Boosters

CN C Series

Flow rate 0.8 to 8.0 m³/min – Drive motor rated power 7.5 to 22 kW
Initial pressure 3 to 13 bar – Final pressure 10 to 45 bar

www.kaeser.com

Boosters

Powerful, compact and quiet, CN C boosters from KAESER brook no compromise when it comes to performance, dependability and energy efficiency. These innovative complete systems come into play when, for technical reasons, specific points in a production process require a pressure higher than the network pressure. Wholly redesigned with a clever new layout, these compact complete machines quite literally have everything you need: not only do they provide optimised cooling air flow, but also offer superior maintenance and service access.

A further key advantage is that these new booster systems are perfectly matched for seamless networking with their “suppliers” – making them fully compatible with Industrie 4.0 environments. This means that CN C series boosters are the ideal solution for such operations as PET bottle production, process air applications, nitrogen generation and the provision of high pressure for testing facilities.

Energy-efficient

Premium Efficiency (IE3) drive motors, fitted as standard, contribute to cost-effective energy usage, as does the generously dimensioned radial fan, which also ensures reliable temperature control.

Service-friendly

All maintenance-relevant components, such as cylinders and venting valves, filters, condensate separators and oil drainage/filler openings are easily accessible thanks to large maintenance doors. The removable panel on the cooler side allows simple belt changes and provides easy access to the cooler.

“Plug & Work” complete systems

KAESER’s integrated booster systems are completely unique: all operationally relevant components are provided ex works and are configured ready for immediate operation with the respective application.

Perfect partners

CN C series boosters are the perfect team players for every compressed air station, not to be outdone by their rotary screw counterparts: equipped with air-cooling, all units are delivered ready for perfect performance in ambient temperatures up to +45 °C. The same also applies to their networking capabilities: the SIGMA CONTROL 2 machine controller ensures full connectivity, both within the air station and with the SIGMA AIR MANAGER 4.0 master controller – and therefore with Industrie 4.0 environments.

All-round reliability

The integrated SIGMA CONTROL 2 controller automatically monitors all key values: initial and final pressure, block discharge temperature of the individual cylinders, drive motor winding temperature, oil pressure/level and compressed air discharge temperature.

Compact design, impressive performance

KAESER’s CN C series boosters deliver precision-tailored extra pressure, yet boast a footprint of only 1.9 m², in contrast to the 3.2 m² of previous models. Moreover, they are delivered as turnkey complete systems: **Simply install, connect and you’re ready to go!**

Image: CN 22 C with one-sided wall installation

Compact and accessible

35.2 bar
09:26
143°C
Log-in successful
Change password:
Name: K00000100
Level: 5
Valid until: 02/20XX
esc
KAESER
RFID
SIGMA CONTROL 2
KAESER

SIGMA CONTROL 2

Designed for boosters

Based on industrial PC technology, the SIGMA CONTROL 2 compressor controller utilises software developed specifically for use with boosters to assure maximum dependability and efficiency at all times. Furthermore, this internal compressor controller provides new, multiple monitoring and control options with an assortment of interfaces and is fully compatible with the SIGMA AIR MANAGER 4.0 master controller.

Operating data storage and web server

The SIGMA CONTROL 2 stores up to 1000 messages in its event history and retains operating data for one year. This greatly simplifies the diagnostics process for precision service and maintenance work. In addition, the integrated web server enables operating data, maintenance and fault messages to be displayed in the browser on any PC – without the need for specialised software.

Intelligent and dependable control

The SIGMA CONTROL 2 is designed to deliver efficient control and monitoring of compressor operation, whilst features such as the clear display and RFID reader support efficient communication and enhanced security. Variable interfaces offer outstanding flexibility and the SD card slot makes updating of the special booster software a breeze.

Your security

RFID functionality means that service work and adjustments to the booster settings can only be performed in the SIGMA CONTROL 2 by authorised personnel, such as qualified KAESER service partners. Manufacturer-provided passwords are not required.

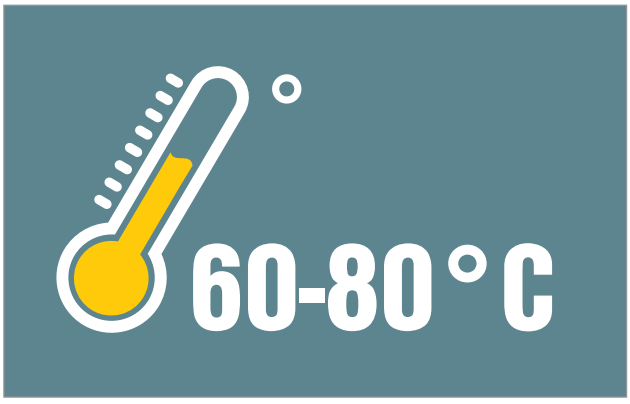

Precision temperature sensor

As part of its comprehensive machine management capabilities, the SIGMA CONTROL 2 also monitors operation-sensitive temperatures, including that of the drive motor, where the winding temperature is measured using a high-precision platinum temperature sensor.

Design is in the details

Simply service-friendly

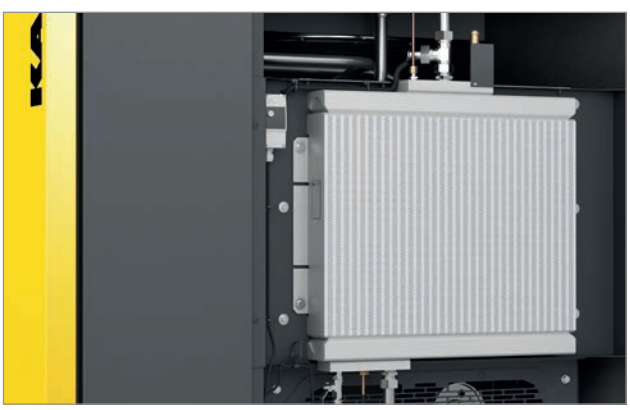

Highly effective compressed air aftercooler

The unvented compressed air aftercooler ensures short switching cycles in partial load operation, thereby saving energy. Furthermore, the generously dimensioned aluminium cooling surfaces reduce the compressed air discharge temperature to near ambient.

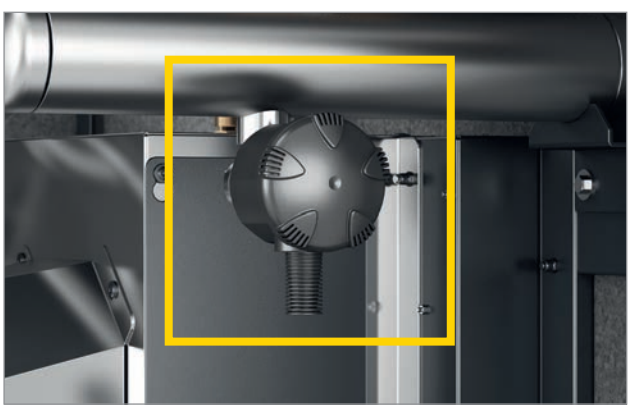

Service-friendly

Just like the air filters, which are changed from the front of the unit, all maintenance-relevant parts are easily accessible. Time-saving features such as these streamline and accelerate maintenance and service work, which translates into lower operating costs and increased availability.

Comprehensive sensors

The comprehensive array of sensors and switching contacts for monitoring pressures, temperatures, oil pressure and oil level ensures reliable operation of the booster and – thanks to the SIGMA CONTROL 2 – enables remote monitoring and visualisation of operating status and all recorded data.

Drive motor with external lubrication

Lubrication of the compressor motor must be performed whilst the machine is still running. This poses no problem for CN C series boosters, since service personnel can easily perform this task safely from the outside of the machine.

Customisable

Optional equipment

Every CN C series booster can be precisely tailored to meet exact operational needs. This means that units can be specially equipped for any application – whether it be PET bottle production, process air applications, nitrogen generation or the provision of high pressure for testing facilities.

Efficient nitrogen compression

CN C boosters for nitrogen (N_2) compression are sealed to prevent outside air penetration and are fitted with additional sensors. Effective pressure reduction at Idle helps to save energy, whilst ensuring high nitrogen quality.

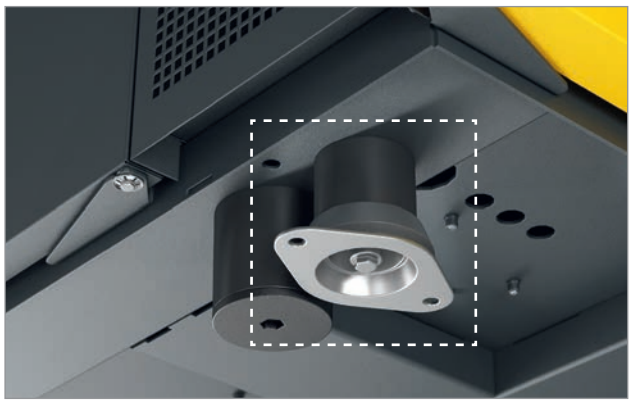

Bolt-down machine feet

CN systems installed on frames or racks, or in containers, can be equipped with individually configurable bolt-down machine feet to ensure they are completely secure at all times.

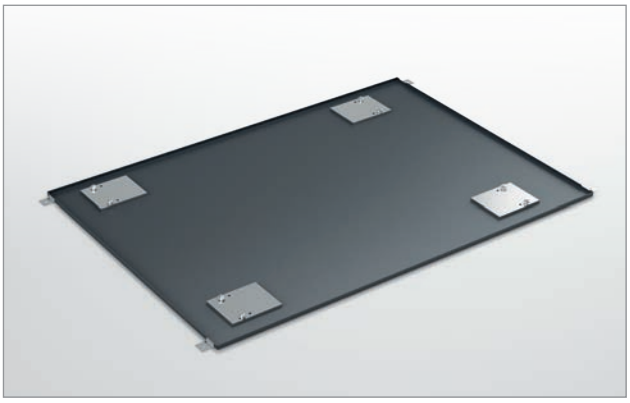

Safe and clean - Oil collection tray

Oil collection trays are indispensable to protect against ground contamination. The requirement for an oil collection tray is determined by the German Federal Water Act and related regulations on facilities handling substances hazardous to water.

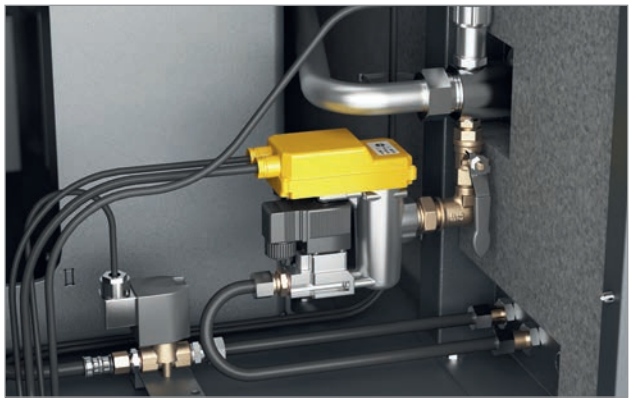

ECO-DRAIN electronic condensate drain

The integrated electronic drain, monitored by the SIGMA CONTROL 2 via a floating contact, ensures dependable drainage of accumulating condensate. This enhances operational reliability.

KAESER
CN 22 C BOOSTER

Example savings calculation for hot air heat recovery from fuel oil (CN 22 C)

Maximum available heat capacity:	22.9 kW	
Calorific value per litre of fuel oil:	9,861 kWh/l	1 kW = 1 MJ/h x 3.6
Fuel oil heating efficiency:	90%	
Price per litre of fuel oil:	€ 1.50/l	

$$\frac{22.9\ \text{kW} \times 4{,}000\ \text{h}}{0.9 \times 9{,}861\ \text{kWh/l}} \times €\ 1.50/\text{l} =$$

€ 15,460 per year

Cost savings

Heat recovery

A master class in energy savings

As self-contained complete systems, boosters are particularly well suited for heat recovery systems. Direct use of the recyclable heat via an exhaust air ducting system enables up to 96% of the total energy input to be recovered and reused for heating purposes. A company's costs for "conventional" space- and water-heating can be reduced significantly by recovering and utilising exhaust heat from the compressor.

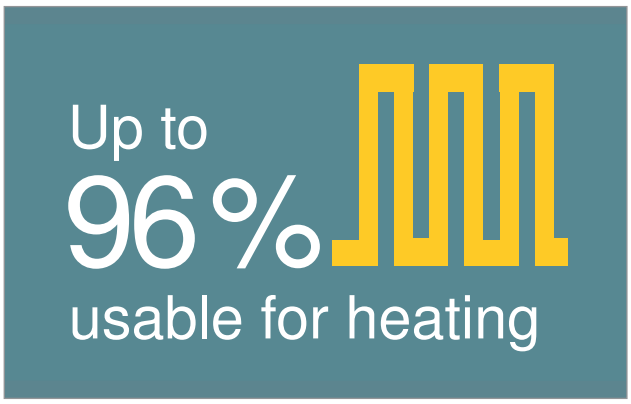

Heat recovery pays off

Amazingly, 100% of the electrical drive energy supplied to a compressor is converted into heat energy. Of that heat, up to 96% can be recovered and reused for heating purposes. If heat recovery options are taken into account during the building design phase, production halls can completely dispense with conventional heating systems.

Direct heat recovery

Heating made easy: Recoverable heat from air-cooled compressors is collected and distributed via flap-controlled air ducting to locations that require heating. This reduces heating costs in winter and during transition seasons.

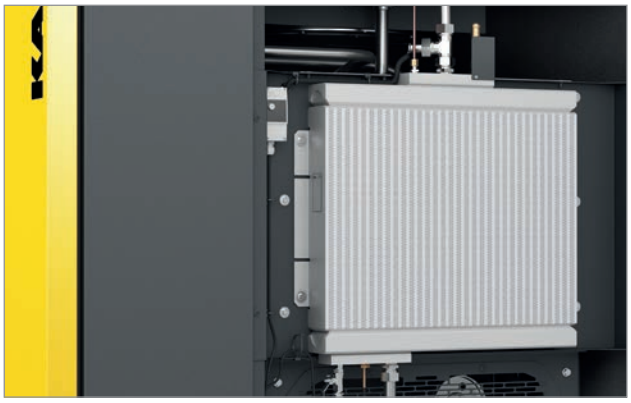

Efficient cooling

Even more recoverable heat is made available for air-heating purposes, thanks to the efficient compressed air cooling performance of the aluminium aftercooler. This also reduces the load on downstream treatment components and ensures reliable operation.

Powerful fans

The exceptionally high residual thrust of the exhaust air fan is sufficient to convey hot air to the consumption points – even over longer ducting – with no need for auxiliary fans, or the associated additional energy costs to run them.

Compressed air stations with boosters

Optimally adapted, holistic solutions

Compressed air supply systems that continue to deliver energy efficiency and reliability over the long term are far more than the sum of their compressors and compressed air treatment components. Only a true systems provider is capable of making the whole greater than the individual parts, by effectively ensuring harmonious coordination of all components, precisely tailored to a user's individual requirements.

Image: Compressed air station: Low and high pressure

Whether for low or high-pressure applications, KAESER KOMPRESSOREN's compressed air experts draw on decades of experience when planning and designing your compressed air supply, in order to provide a holistic solution that utilises only the highest-quality products. How do you benefit? True to KAESER's slogan, you benefit from "More compressed air for less energy".

Clever temperature management

Optimised cooling air flow

CN C boosters feature separate cooling air flows for the compressor block, drive motor and control cabinet, which are drawn in through openings in the right-hand side of the enclosure. Once they have been used for cooling, the separate air flows are combined and then discharged upwards through the exhaust air outlet in the top of the housing. This clever design reliably prevents cool inlet air from mixing with warm exhaust air – for enhanced efficiency. Thermal overload is therefore kept in check and a separate, energy-consuming cooling system for idling is necessary only under extreme conditions.

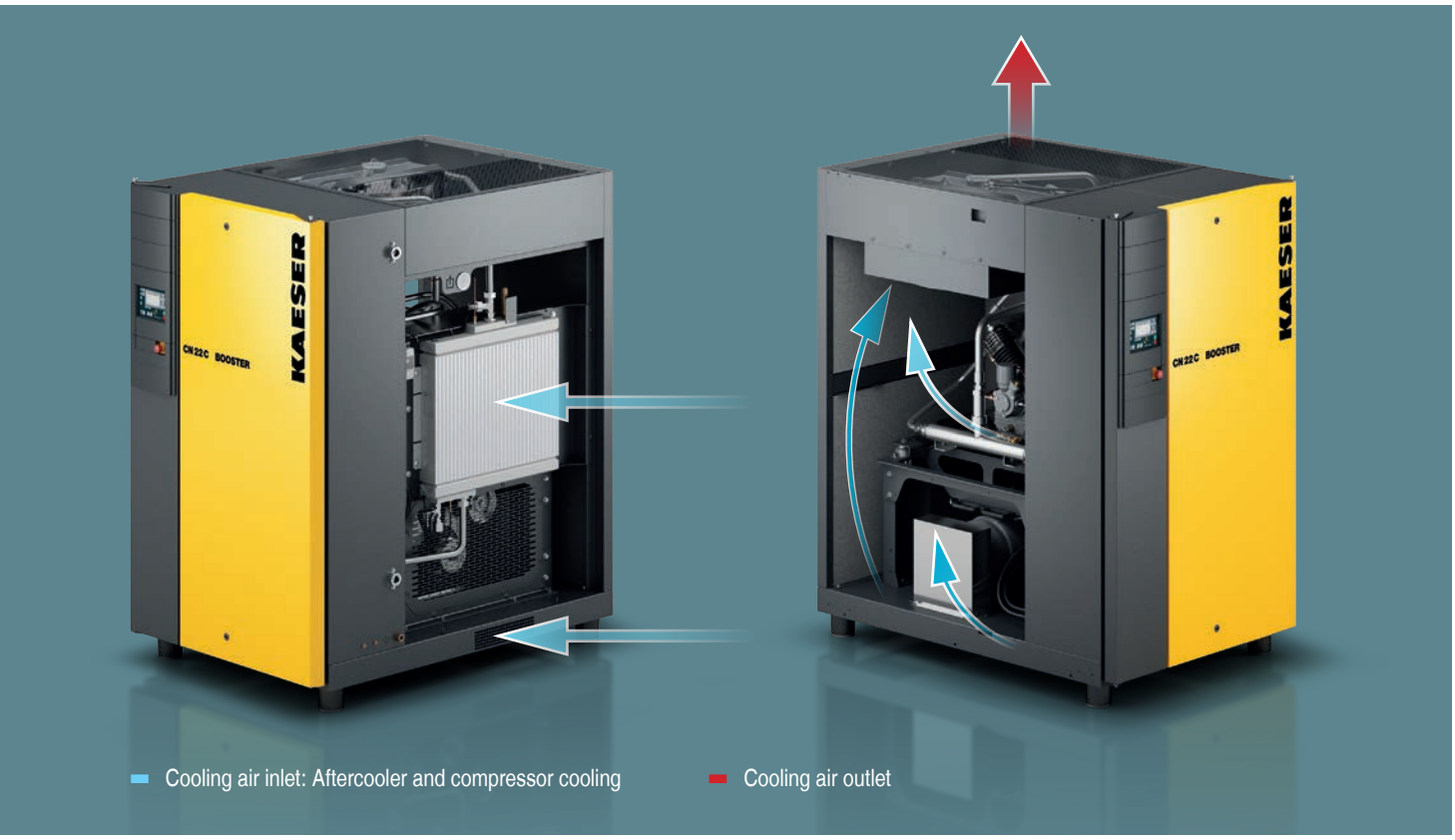

KAESER PET AIR

This all-in-one booster system combines blower and control air in a single, turnkey unit. A rotary screw compressor, blower air booster, controller and compressed air treatment components are all installed on a single base frame – ready for immediate operation. SIGMA PET AIR is available for flow rates up to 46.2 m³/min and with blower air up to 45 bar. All with the outstanding reliability, cost-effectiveness and compressed air quality you expect from KAESER.

Turnkey modules

The new all-in-one solution

CN C series boosters are delivered as complete turnkey systems, precisely matched to the upstream compressor. Thanks to the SIGMA CONTROL 2 controller, they are ready for connection and self-monitoring – a huge advantage for keeping installation time and costs to a minimum. KAESER is therefore the first manufacturer in the booster sector to offer such user-friendly complete solutions, all neatly contained within a single compact housing.

SIGMA CONTROL 2 controller

Fan with high residual thrust

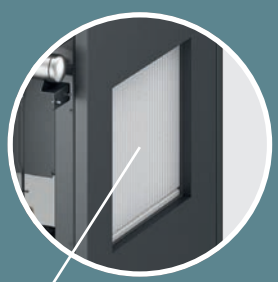

Highly effective compressed air aftercooler

Integrated sensors

Sound enclosure

All maintenance work can be carried out from one side of the unit

Plug and Work

Image: CN C series booster

Equipment

Complete system

Ready for operation, fully automatic, soundproofed, vibration-insulated, automatic belt tensioning; low motor speeds for long service life and consistently high efficiency; powder-coated enclosure; suitable for ambient temperatures up to +45 °C; service-friendly design: External lubrication of drive motor bearings; high-quality materials, durable construction, meticulous assembly and test run.

Oil circuit

The integrated oil pump is driven via the compressor block drive shaft. Pressure lubrication with integrated oil filter ensures a seamless supply of oil. Dependable operation is further ensured by continuous monitoring of the oil pressure and level.

Nitrogen version (option)

In partial load operation, the special bypass control reliably prevents ambient air from entering the system. Care must be taken to ensure that only dry nitrogen (max. 20% relative humidity) is drawn in.

With CN C series machines, controlled actuation of the valves further reduces pressure and power consumption at Idle. Additional sensors provide enhanced operational reliability.

Electrical components

Premium Efficiency IE3 drive motor with Pt100 windings temperature sensor for monitoring the motor, separate radial fan with high residual thrust, IP54 control cabinet, automatic star-delta combination, overload relay, control transformer, initial and discharge pressure sensors, Pt100 sensor for block discharge temperature from the individual cylinders and compressed air discharge temperature, oil pressure sensor and oil fill level switch.

SIGMA CONTROL 2

“Traffic light” style LEDs show operating status at a glance; clear text display, 30 selectable languages, soft-touch icon keys; fully automatic monitoring and control; interfaces: Ethernet; additional optional communications modules for: Profibus DP, Modbus, Profinet and DeviceNet. SD memory card slot (8 GB card as standard) for data storage and updates; RFID reader, web server – graphic display of measured and operating data as well as status display (Load, Idle and Stop) and message history (operating, warning and fault messages).

SIGMA AIR MANAGER 4.0

The refined, adaptive 3-D^{advanced} Control predictively calculates and compares the various operating options and selects the most efficient one to suit the specific needs of the application.

The SIGMA AIR MANAGER 4.0 master controller is able to control operation – of both frequency-controlled and fixed-speed boosters alike – in such a manner that minimal energy is consumed, whilst at the same time the actual amount of air currently required always remains available. This optimisation is made possible by the integrated industrial PC with multi-core processor, in combination with the adaptive 3-D^{advanced} Control. Furthermore, the SIGMA NETWORK bus converter (SBC) provides a host of possibilities for enabling the system to be individually tailored to meet specific user requirements. The SBC can be equipped with digital and analogue input and output modules, as well as with SIGMA NETWORK ports, in order to enable seamless display of flow rate, pressure dew point, performance information or fault messages.

Amongst other key features, the SIGMA AIR MANAGER 4.0 provides long-term data storage capacity for reporting, controlling and audits, as well as for energy management tasks as per ISO 50001.

(See image on right)

Digital output device, e.g. laptop

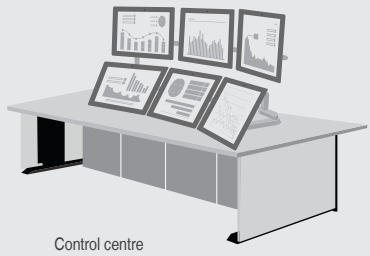

Control centre

KAESER CONNECT

SIGMA AIR MANAGER 4.0

Communications module, e.g. Modbus TCP

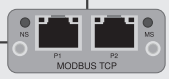

KAESER SIGMA NETWORK

SIGMA CONTROL 2
controller

SIGMA NETWORK bus converter

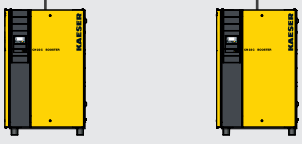

Connection to boosters
with SIGMA CONTROL 2

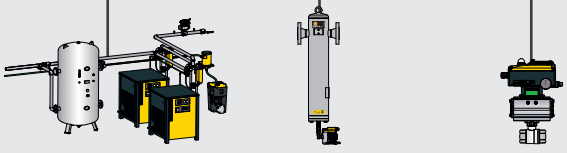

Various connection options for treatment components

Secure data – secure business!

Technical specifications

Air-cooled version (50 Hz)

Model	Initial pressure	Final pressure	Flow rate *)	Drive motor rated power	Block speed	No. of cylinders	Sound pressure level **)	Comp. air connection		Dimensions W x D x H	Weight
								Inlet	Outlet		
	bar	bar	m³/min	kW	Strokes/min		dB(A)	Inlet side	Discharge side	mm	kg
CN 7 C	5	25	1.26	7.5	1250	2	71	G1	G1	1210 x 1590 x 1890	790
	7.5		2								
	10	45	1.75		900						
CN 11 C	5	25	2.09	11	985	2	73	G1	G1	1210 x 1590 x 1890	920
	7.5	35	2.47		795						
	10		3.3		750						
CN 15 C	5	25	2.54	15	1235	2	74	G1	G1	1210 x 1590 x 1890	920
	7.5	35	4.17		895						
	10	45	3.63		890						
CN 22 C	5	25	2.54	22	1235	2	75	G1	G1	1210 x 1590 x 1890	920
	7.5	35	3.68								
	10	45	4.83								

*) Flow rate, complete system as per ISO 1217: 2009, Annexe C: absolute inlet pressure 1 bar (a), cooling and air inlet temperature +20 °C

**) Sound pressure level as per ISO 2151 and basic standard ISO 9614-2, tolerance: ± 3 dB (A)

Views

CN 22 C model

How it works

Air-cooled version

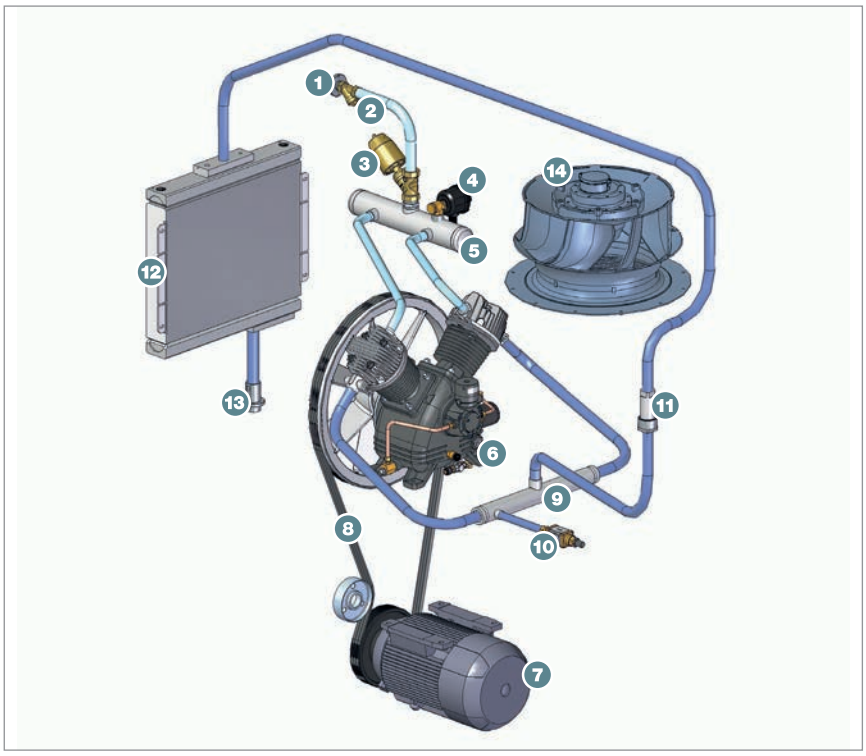

1) Compressed air inlet
2) Inlet-side dirt trap
3) Inlet valve
4) Air filter for idling control
5) Inlet-side collecting pipe
6) Compressor block
7) Compressor motor
8) V-belt
9) Pressure-side collecting pipe
10) Relief valve
11) Pressure-side check valve
12) Air cooler (air-cooled versions)
13) Compressed air outlet
14) Fan motor

Pre-compressed air is drawn into the booster via the compressed air inlet (1).

In order to protect the booster compressor from contaminants, this compressed air first passes through an integrated dirt trap (2).

The inlet valve (3) controls the air supply in Load/Idle operation and closes should the initial pressure drop too low.

The air is conveyed into the compressor block's two cylinders simultaneously via the inlet-side collecting pipe (5).

In Idle mode, ambient air is drawn in via the air filter (4).

The compressor block (6) is the beating heart of the booster system and comprises a crankcase, crankshaft, con rod, pistons, cylinders, cylinder heads, plus inlet and outlet valves.

The block is driven by a high-efficiency compressor motor (7) via two belt pulleys with V-belts (8), automatic tensioning and monitoring.

Following compression, the compressed air is conveyed through the pressure-side collecting pipe (9), which also serves as a pulse damper.

The relief valve (10), through which the inlet ambient air is released during Idle operation, is located here.

A check valve (11) is installed in order to prevent high-pressure air from flowing back from the pressure side when the booster is shut down or at Idle.

The air-cooled aftercooler (12) cools the compressed air down almost to ambient temperature.

An integrated radial fan (14) with high residual thrust and separate drive motor serves to convey the exhaust air into the downstream air ducting.

The high-pressure compressed air exits the system via the compressed air outlet (13).

More compressed air for less energy

The world is our home

As one of the world's largest manufacturers of compressors, blowers and compressed air systems, KAESER KOMPRESSOREN is represented throughout the world by a comprehensive network of wholly owned subsidiaries and authorised distribution partners in over 140 countries.

By offering innovative, efficient and reliable products and services, KAESER KOMPRESSOREN's experienced consultants and engineers work in close partnership with customers to enhance their competitive edge and to develop progressive system concepts that continuously push the boundaries of performance and technology. Moreover, decades of knowledge and expertise from this industry-leading systems provider are made available to each and every customer via the KAESER group's advanced global IT network.

These advantages, coupled with KAESER's worldwide service organisation, ensure that every product operates at the peak of its performance at all times, providing optimal efficiency and maximum availability.

KAESER KOMPRESSOREN Philippines, Inc.
Suites 100 & 200 PB Dionisio Bldg. II – No. 27 Don Alejandro Roces Avenue,
Quezon City 1103, Philippines
Tel.: (+632) 8372-6642
E-mail: info.philippines@kaeser.com – www.kaeser.com

P-482PH Specifications subject to change without notice /24