KAESER COMPRESSORS®



KAESER FILTERS

KF F350 to F3360 Series

Dependable purity for high flow rates

Flow rate 35.4 to 336.3 m^3/min, Pressure 2 to 16 bar

www.kaeser.com

KF F350 to F3360 series

Pure compressed air at low cost

KAESER FILTER products are the key components for providing compressed air to all purity classes in accordance with ISO 8573-1. Thanks to generous nominal widths and efficient filter elements, they deliver a very low pressure loss of maximum 0.2 bar (ISO 12500-1). KAESER FILTERs are available in four different degrees of filtration. Nine individual models provide efficient filtration for flow rates from 35.4 to 336.3 m³/min.

Standard-compliant purity

The KAESER FILTER range uses modern deep-pleated filter media to remove particles and aerosols, whilst highly effective carbon fleeces trap oil vapours. Combined with generously dimensioned nominal widths and flow cross sections, they deliver exceptional filtration efficiency with minimal pressure loss. The outstanding performance data for KAESER FILTERs have been determined in accordance with ISO 12500 and validated by the independent institute IUTA e.V.

Service-friendly design, safe handling

KAESER FILTER products feature a corrosion-resistant steel housing and sturdy filter elements. Threaded rods and positioning guides ensure rapid element changes and dependable sealing of the filter elements. Furthermore, KB and KE coalescence filters are equipped as standard with the electronic, level-controlled ECO-DRAIN 31 Vario condensate drain. Coalescence and dust filters are equipped with a differential pressure gauge, which, thanks to its design as a Bourdon tube pressure gauge, provides dependable readings with low pressure losses.

Minimal pressure loss, maximum savings

The cost efficiency of a compressed air filter does not depend on pressure loss alone. KAESER FILTERs feature generously dimensioned housings and filter surfaces, as well as high-performance filter media. The result is up to 50% lower pressure loss when compared to conventional filters on the market – a figure that remains virtually constant throughout the service life of the filter element. This relieves the burden on the upstream compressors and delivers significantly lower energy costs, as well as a reduced CO_2 footprint.

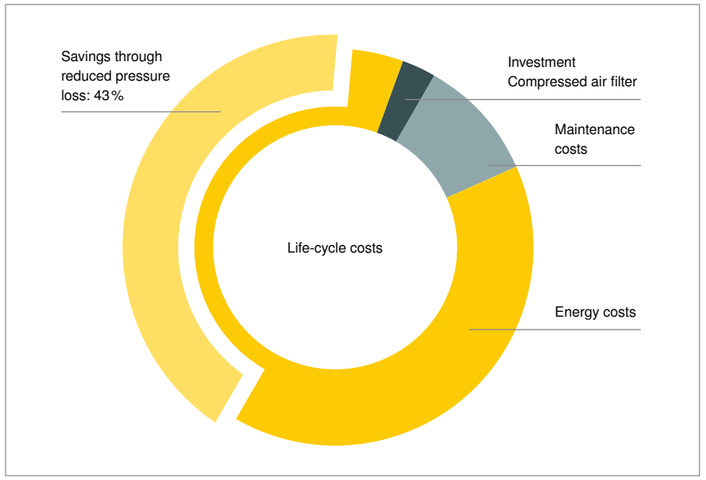

Coalescence filter example

- Flow rate up to 88.5 m³/min
- 50% lower pressure loss
- 6.55 kW/(m³/min)
- Additional energy requirement 6% per bar
- Electricity price € 0.2/kWh
- 8760 operating hours p.a.
- Annual debt service over 10 years



(01)	Compressed air inlet
(02)	Connection flange, inlet
(03)	Element thread with positioning guide and flow distributor
(04)	Filter element
(05)	Connection flange, outlet
(06)	Compressed air outlet
(07)	Lifting eye
(08)	Vessel, coated and painted
(09)	Vessel cap
(10)	Angle ball valve, rotatable
(11)	ECO-DRAIN 31 Vario
(12)	Condensate outlet
(13)	Differential pressure gauge
(14)	FILTER CHANGE

Image:
KAESER FILTER F530KE – 35.40 m³/min



Image:
KAESER FILTER with differential pressure gauge – Designed as Bourdon tube pressure gauge for precision display in the mbar range.

KF F350 – F3360 series

Low differential pressure for best possible efficiency

6% lower electricity costs per m³/min of compressed air for every bar of reduced pressure loss. This rule of thumb demonstrates that generously sized KAESER FILTERs quickly pay for themselves, especially at high flow rates.

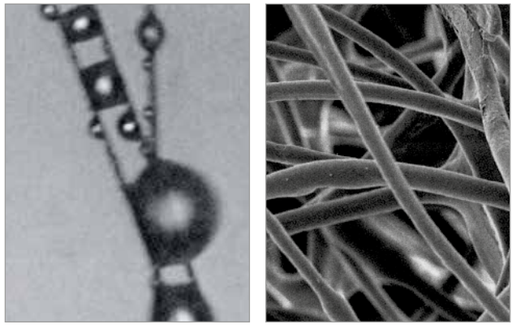

Low flow resistance

The polyester material used in the drainage layer ensures rapid draining of the oil (left). For best possible filtration and contaminant retention with low pressure loss, KAESER dust and coalescence filters use filter media that feature a high void ratio (right).

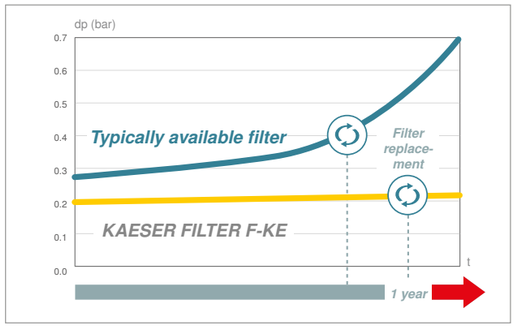

High dust retention capacity

KAESER FILTERs operate with a significantly lower initial pressure loss than conventional filters. Thanks to the high retention capacity of the filter elements, dust and aerosols remain at a constantly low level over the long term. The result? Permanently low operating costs. Annual maintenance prevents age-related risks and ensures optimal and reliable compressed air purity.



Generous nominal widths

KAESER FILTERs feature generously dimensioned connection flanges – often a full nominal width larger than typical filters available. They can be easily integrated into the piping network of modern compressed air stations without the use of a reduction flange, thereby preventing unnecessary pressure loss.



Consistently high efficiency

Fitted as standard to KAESER dust and coalescence filters, the differential pressure indicator enables users to keep an eye on the low pressure loss (= efficiency) at all times. Unlike other common designs, the contaminated- and clean-air sides are separated from one another.

KF F350 – F3360 series

Standard-compliant purity in every quality class

The generous dimensioning of KAESER FILTERs has proven itself on the most sophisticated test benches and in stringent measurement programmes. Tried and tested KAESER FILTER products operate dependably and energy-efficiently – and are officially certified to prove it.

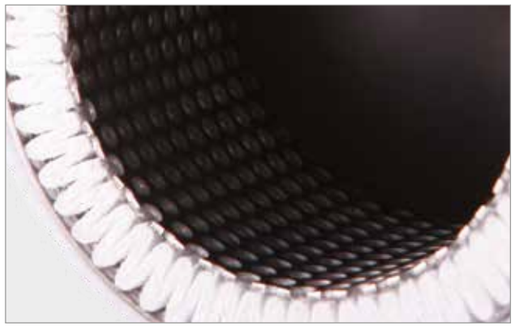

Deep-pleated filter elements

The deep-pleated KAESER dust and coalescence filter elements feature exceptionally large filter surfaces. The resulting increase in efficiency means operating costs are significantly reduced in comparison with conventional filter components.

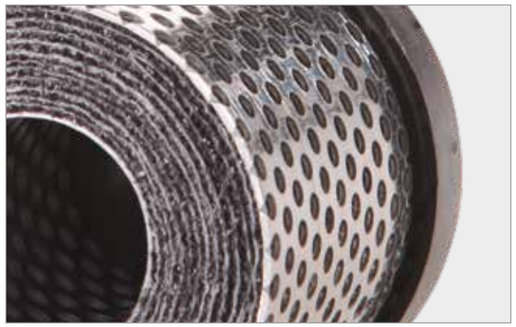

High-efficiency carbon fleece

Unlike on conventional filters, the high-efficiency carbon fleece used in KAESER's activated carbon filters prevents channelling whilst at the same time ensuring reduced differential pressure. Moreover, the fleece provides effective protection against particle release.



Secure element seating

The filter elements in KAESER FILTERs are dependably secured inside the filter vessel by means of a threaded rod. When screwed in, the seal on the face of the element head presses securely against the element seating, thereby reliably preventing overflow on the clean-air side.



Certified performance data

The separation efficiency and pressure loss of KAESER FILTER products have been independently tested in accordance with ISO 12500 – thereby guaranteeing certified peak performance!



Degree of filtration	KB Coalescence filter Basic	KE Coalescence filter Extra	KD Dust filter Dust	KA Activated carbon filter Adsorption	KBE Extra Combination	KEA Carbon Combination
Initial differential pressure at saturation	< 0.15 bar	< 0.2 bar	< 0.06 bar (New, dry)	< 0.08 bar (New, dry)	< 0.26 mbar	< 0.29 bar
Aerosol content at inlet	10 mg/m³	10 mg/m³	–	–	10 mg/m³	10 mg/m³
Residual aerosol content at outlet as per ISO 12500-1:06-2007	< 0.1 mg/m³	< 0.01 mg/m³	–	–	< 0.01 mg/m³	0.003 mg/m³ (Total oil content)
Filter medium	Deep-pleated with support structure and polyester drainage fleece		Deep-pleated with support structure	High-efficiency carbon fleece	–	–
Use	Filtration of solid and liquid aerosols and solid particles	Use as per KB, but for higher compressed air quality Alternatively: Ultra-fine particle filter to KD degree of filtration	Exclusively for filtration of solid particles	Exclusively for removal of oil vapours	Combination of KB and KE; same use as KE, but higher reliability of compressed air quality	Combination of KE and KA, filtration of aerosols, solid particles, and oil vapours

Image:
KD dust filter with manual condensate drain on ACT activated carbon adsorber.



KF F350 – F3360 series

Safe handling, service-friendly design

KAESER understands its customers' needs very well, since the company itself operates numerous compressed air stations. From first-hand experience, we are well-versed in all aspects of compressed air station planning, implementation, operation and maintenance. We draw on this expertise to create user-friendly and low-maintenance products.

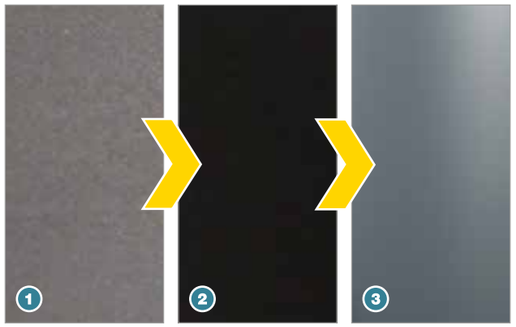

Corrosion-protected housing

The steel vessels on KAESER FILTERs are sand-blasted (1), cleaned, and provided with a cathodic dip coating (2) before being powder-coated (3). Both the inner and outer surfaces therefore feature outstanding corrosion protection.

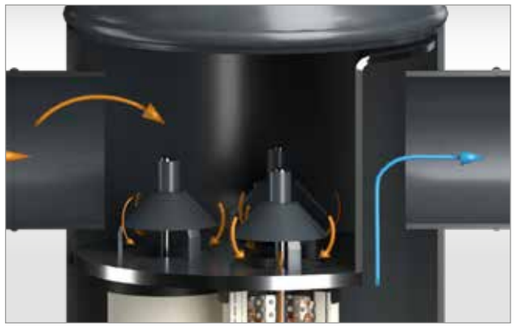

Simple positioning

The funnel-shaped positioning guides on the filter housing make the element's threaded rods easy to screw in, which facilitates rapid servicing.



Condensate accumulation function check

On coalescence filters, condensate drainage can be triggered via the test button on the standard-equipped ECO-DRAIN 31 VARIO. On dust and activated carbon filters, it can be easily checked by means of a ball valve whether condensate is accumulating due to an error.



Robust stainless steel cage

KAESER filter elements are protected by inner and outer cages constructed from continuously welded profiled stainless steel, which are more resistant to mechanical stress than simple expanded metal cages.

KF F350 – F3360 series

KAESER FILTER

To ensure that low energy costs and the required degree of compressed air purity are consistently maintained, the filter elements must be replaced at the end of their service life. The standard-equipped FILTER CHANGE supports this process. When it comes to the reliable filtration of aerosols, dependable condensate drainage is also essential. The automatic ECO-DRAIN condensate drain ensures economical draining of coalescence filters without compressed air loss.



FILTER CHANGE

The FILTER CHANGE display provides information regarding the remaining service life of the filter elements via accumulating arrow segments. A flashing LED indicates when a change is due. The change can be acknowledged via a button on the rear side. The monitored interval can be set to one of 4 levels. The replaceable battery has a service life of up to 7 years. FILTER CHANGE is affixed to the filter housing by means of industrial hook-and-loop fastener.

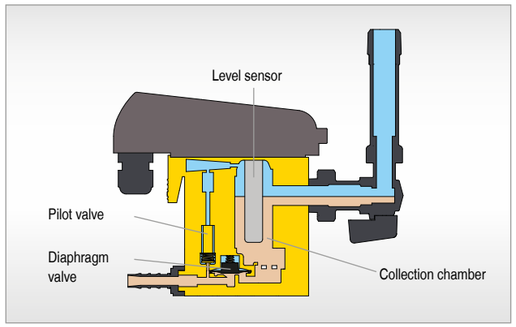

Dependable and loss-free

ECO-DRAIN condensate drains detect the fill level using a contact-free sensor and then drain the condensate without pressure loss via a pilot-operated diaphragm valve. The large cross sections mean maintenance-intensive strainers are not required.

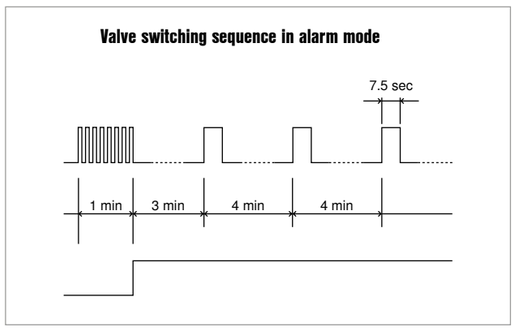

Self-monitoring

In the event of a condensate drainage fault, the ECO-DRAIN valve opens at short intervals for one minute. If the condensate is not removed, a message is triggered and the valve opens for 7.5 seconds every 4 minutes. Once the condensate drains, the ECO-DRAIN reverts to normal operation.



Tested for leaks and proper function

All parts of the ECO-DRAIN 31 Vario that are subject to stress can be replaced by changing the service unit – replacement of the seal is not required. To ensure error-free maintenance, the condensate drain and service unit are 100% factory-tested for leaks and proper function.



Image: Coalescence filter with ECO-DRAIN 31 VARIO, horizontally pivotable



Image 1

Image 2

Image 3

Equipment

Coalescence filter

- Corrosion-protected, painted steel housing with flange connection
- Differential pressure gauge and KB or KE filter element (pre-installed)
- Rotatable angle ball valve and ECO-DRAIN 31 Vario electronic condensate drain with maintenance management (supplied loose)
- FILTER CHANGE

(Image 1)

Dust filter

- Corrosion-protected, painted steel housing with flange connection
- Differential pressure gauge and KD filter element (pre-installed);
- Manual condensate drain (supplied loose)
- FILTER CHANGE

(Image 2)

Activated carbon filter

- Corrosion-protected, painted steel housing with flange connection
- KA filter elements (pre-installed)
- Manual condensate drain (supplied loose)
- FILTER CHANGE

(Image 3)

Further options



Differential pressure transducer

Instead of the mechanical differential pressure gauge, KAESER FILTERs can optionally be equipped with a differential pressure transducer (factory-fitted). The sensor uses 3-wire technology and transmits the differential pressure as a 4–20 mA signal. This value can be forwarded to a master controller such as the SIGMA AIR MANAGER 4.0, and from there can also be transmitted to the KAESER SIGMA NETWORK.



Silicone-free version

KAESER FILTERs are optionally available as silicone-free versions compliant with the VW test standard PV 3.10.7. Each filter undergoes an individual paint test to confirm compliance.

The manufacturer‘s certificate provided attests that the product is silicone-free. Moreover, all filter elements for KAESER FILTER products are manufactured silicone-free in accordance with this regulation as standard.

Equipment

Model	Compressed air connection DN	Volume l	B mm	C mm	D mm	E mm	F mm
F 350	80	34	216	910	1055	1108	400
F 530	100	48	271.4	918	1099	1152	450
F 700	150	75	320	962	1180	1233	535
F 880	150	75	320	960	1180	1233	535
F 1060	150	135	401.7	960	1214	1267	600
F 1410	200	220	503.6	993	1299	1352	720
F 1940	200	220	503.6	993	1299	1352	720
F 2470	250	250	550	1024	1387	1440	750
F 3360	250	350	602.5	1066	1429	1482	850

Compressed air connection: PN16 in accordance with DIN EN 1092-1

Views

Drawings show type F3360

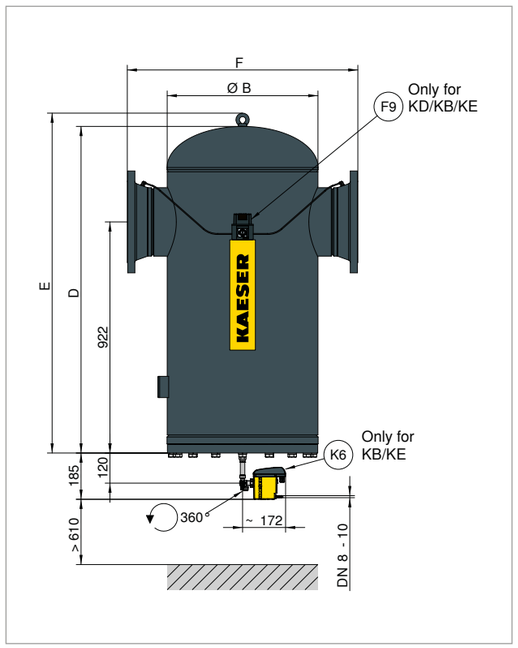

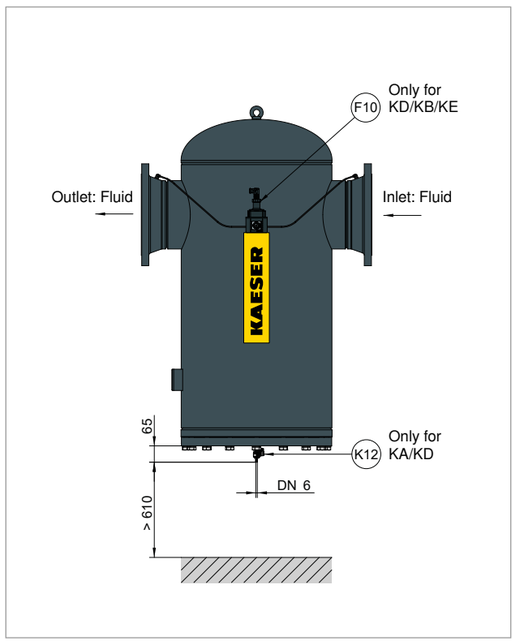

Technical data

Model	Flow rate * m³/min	Gauge pressure bar	Ambient temperature °C	Compressed air inlet temperature °C	Maximum weight kg	ECO-DRAIN power supply
F 350	35.40	2 to 16	+3 to +50	+3 to +66	54	95–240 VAC ± 10% (50–60 Hz) / 100–125 VDC ±10%
F 530	53.10	2 to 16	+3 to +50	+3 to +66	76	
F 700	70.80	2 to 16	+3 to +50	+3 to +66	107	
F 880	88.50	2 to 16	+3 to +50	+3 to +66	107	
F 1060	106.20	2 to 16	+3 to +50	+3 to +66	162	
F 1410	141.60	2 to 16	+3 to +50	+3 to +66	262	
F 1940	194.70	2 to 16	+3 to +50	+3 to +66	270	
F 2470	247.80	2 to 16	+3 to +50	+3 to +66	287	
F 3360	336.30	2 to 16	+3 to +50	+3 to +66	340	

* Performance data at 7 bar gauge pressure, relating to 1 bar(a) ambient pressure and 20 °C. The flow rate will differ for deviating operating conditions.

Degrees of filtration

Degree of filtration	KB Coalescence filter Basic	KE Coalescence filter Extra	KD Dust filter Dust	KA Activated carbon filter Adsorption	KBE Extra Combination	KEA Carbon Combination
Initial differential pressure at saturation	< 0.15 bar	< 0.2 bar	< 0.06 bar (New, dry)	< 0.08 bar (New, dry)	< 0.26 mbar	< 0.29 bar
Aerosol content at inlet	10 mg/m³	10 mg/m³	–	–	10 mg/m³	10 mg/m³
Residual aerosol content at outlet in accordance with ISO 12500-1:06-2007	< 0.1 mg/m³	< 0.01 mg/m³	–	–	< 0.01 mg/m³	0.003 mg/m³ (Total oil content)
Filter medium	Deep-pleated with support structure and polyester drainage fleece		Deep-pleated with support structure	High-efficiency carbon fleece	–	–
Use	Filtration of solid and liquid aerosols and solid particles	Use as per KB, but for higher compressed air quality Alternatively: Ultra-fine particle filter to KD degree of filtration	Exclusively for filtration of solid particles	Exclusively for removal of oil vapours	Combination of KB and KE; same use as KE, but higher reliability of compressed air quality	Combination of KE and KA, filtration of aerosols, solid particles, and oil vapours

Calculating flow rate

Correction factors for deviating operating conditions (flow rate in m³/min x k...)

Deviating working pressure p at filter inlet															
p bar$_{(g)}$	2	3	4	5	6	7	8	9	10	11	12	13	14	15	16
k_p	0.38	0.50	0.63	0.75	0.88	1.00	1.06	1.12	1.17	1.22	1.27	1.32	1.37	1.41	1.46

Example:				
Working pressure	8 bar	->	Factor	1.06

KAESER FILTER F 880 with flow rate 88.50 m³/min
Max. possible flow rate under operating conditions
V_{max} Operation = $V_{Reference}$ x k_p
V_{max} Operation = 88.50 m³/min x 1.06 = 93.81 m³/min

More compressed air for less energy

The world is our home

As one of the world's largest manufacturers of compressors, blowers and compressed air systems, KAESER KOMPRESSOREN is represented throughout the world by a comprehensive network of wholly owned subsidiaries and authorised distribution partners in over 140 countries.

By offering innovative, efficient and reliable products and services, KAESER KOMPRESSOREN's experienced consultants and engineers work in close partnership with customers to enhance their competitive edge and to develop progressive system concepts that continuously push the boundaries of performance and technology. Moreover, decades of knowledge and expertise from this industry-leading systems provider are made available to each and every customer via the KAESER group's advanced global IT network.

These advantages, coupled with KAESER's worldwide service organisation, ensure that every product operates at the peak of its performance at all times, providing optimal efficiency and maximum availability.



TÜVRheinland CERTIFIED
Management System
ISO 9001:2015
ISO 14001:2015
www.tuv.com ID 9108616471

KAESER COMPRESSORS Australia Pty. Ltd.
Locked Bag 1406 – Dandenong South – Vic. 3164
45 Zenith Road – Dandenong South – Vic. 3175
Phone: +61 39791 5999 – Fax: +61 39791 5733
au.kaeser.com – E-mail: info.australia@kaeser.com

P-737AUS Specifications subject to change without notice. 2/26