KAESER COMPRESSORS®

Rotary Screw Compressors

SX Series

With the world-renowned SIGMA PROFILE

Flow rate 0.26 to 0.81 m³/min, Pressure 5.5 to 15 bar

www.kaeser.com

SX Series

Long-term savings

Compressed air users expect maximum availability and efficiency, even from smaller compressors. It will therefore come as no surprise that KAESER's SX series rotary screw compressors go far beyond meeting these key expectations. Not only do they deliver more compressed air for less energy, but they also combine ease of use and maintenance with exceptional versatility and environmentally responsible design.

More air for your money

KAESER's engineers have significantly boosted the performance of SX series compressors compared to previous models. This impressive feat has been achieved both through airend optimisation and the minimisation of internal pressure losses.

Energy-saving performance

The efficiency of a machine depends on the total costs incurred throughout the equipment's entire service life. With compressors, energy costs account for the lion's share of total expenditure. KAESER therefore designed its SX series compressors with optimum energy efficiency in mind. Refinements to the energy-saving SIGMA PROFILE airend rotors and the use of premium efficiency IE3 motors have significantly contributed to the increased performance of these versatile compressors. The addition of the SIGMA CONTROL 2 internal controller and KAESER's unique cooling system have helped to push the boundaries of efficiency even further.

Optimised design

All SX models share logical and user-friendly design throughout. For example, the left-hand enclosure panel can be removed in a few simple steps and allows excellent visibility of the system's intelligently laid out components. Needless to say, the SX series was designed to ensure best possible access to all service points. When closed, the sound-absorbing compressor enclosure keeps operational sound levels to a minimum, thereby ensuring a pleasantly quiet work environment. Moreover, with its three intake openings, the enclosure provides separate air flow for high efficiency cooling of the compressor, the drive motor and switching cabinet. Last but not least, SX series compressors are impressively compact, which makes them the perfect choice for applications where space is at a premium.

Modular system concept

SX series compressors are available as standard versions, as models with an integrated energy-saving refrigeration dryer and as "AIRCENTER" models that include an air receiver installed beneath. KAESER's intelligent modular design therefore offers incredible flexibility.

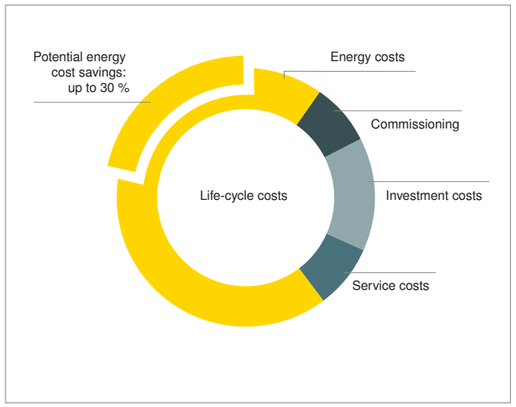

Energy-efficiency: the essential requirement

Investment and service costs account for only a small part of a compressor's total life-cycle costs. Energy accounts for the lion's share of the system's costs.

KAESER has been committed to minimising your energy costs for compressed air production for over 40 years. We also have the bigger picture in clear focus when it comes to service and maintenance, as well as maximum compressed air supply availability.

Quiet, powerful and reliably durable

Image: SX 8

SX Series

Design is in the details

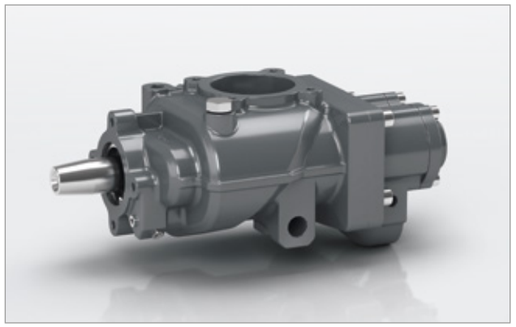

SIGMA PROFILE airend

At the heart of every SX system lies a new premium-quality airend featuring KAESER's SIGMA PROFILE energy-saving rotors. Operating at low speed, KAESER's airends are equipped with flow-optimised rotors for superior efficiency.

SIGMA CONTROL 2

The SIGMA CONTROL 2 ensures efficient control and system monitoring. The large display and RFID reader provide effective communication and maximum security. Multiple interfaces offer exceptional flexibility, whilst the SD card slot makes updates quick and easy.

Maximum efficiency: IE3 motors

Needless to say, every KAESER SX series rotary screw compressor features an energy-saving, premium-efficiency IE3 drive motor.

Efficient cooling

KAESER's innovative cooling system uses a high-efficiency dual-flow fan and separate airflow channels for cooling of the motor, the fluid/compressed air aftercooler and the control cabinet. This not only achieves optimum cooling performance, low compressed air discharge temperatures and minimal sound levels, but also promotes efficient air compression.

SX T series

Also with compact integrated refrigeration dryer

SX with energy-saving dryer

The compressed air refrigeration dryer is installed in a separate enclosure, to prevent exposure to heat from the compressor package. The automatic dryer shutdown feature further aids energy-efficient performance.

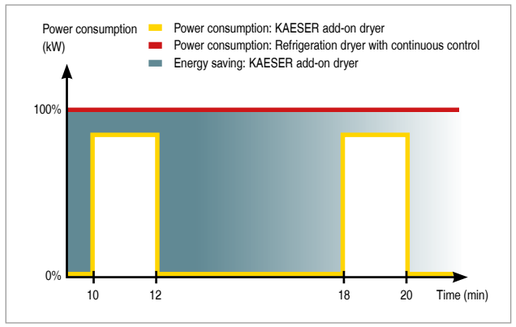

Energy-saving control

The integrated refrigeration dryer in SX-T units provides high-efficiency performance thanks to its energy-saving control. The dryer is therefore active only when compressed air actually needs to be dried: as a result, this approach achieves the required compressed air quality with maximum efficiency.

Even quieter

The new cooling system provides outstanding cooling performance and enables optimum sound-proofing. Normal conversation can take place right next to the running compressor.

Maintenance-friendly

All maintenance work can be carried out from one side of the unit. The left housing cover is easily removed to allow excellent component accessibility.

Image: SX 8 T

Image: AIRCENTER SX 8 T

AIRCENTER

The compact and efficient compressed air station

Connect and go

Simply connect the power supply and air distribution network to this compact compressed air package and you're ready to go. That's it!

Durable air receiver

The 200-litre air receiver is especially designed for installation in AIRCENTER systems. All inner and outer surfaces are coated to provide excellent corrosion protection and to ensure long service life.

Service-friendly design

The left-hand housing cover is easily removed to allow excellent accessibility to all service points. Inspection glasses allow convenient inspection of fluid levels, condensate drain and drive belt tension whilst the unit is in operation.

KAESER FILTER products for pure air

Thanks to lowest-possible differential pressure, original KAESER FILTER products (optional) efficiently ensure compressed air of all purity classes as per the ISO 8573-1 standard, and feature rapid and clean filter element replacement.

PREMIUM EFFICIENCY
IE3
MOTOR
KAESER
KAESER
SIGMA CONTROL 2
SX 8
SIGMA

Equipment

Complete unit

Ready-to-run, fully automatic, super-silenced, vibration damped, all panels powder coated. Suitable for use in ambient temperatures up to +45 °C.

Airend

Genuine KAESER single-stage airend with SIGMA PROFILE rotors and cooling fluid injection for optimised rotor cooling.

Electric motor

Premium efficiency IE3 motor, quality German manufacture, IP 54.

Fluid and air flow

‘Honeycomb’ structure air intake filter, pneumatic inlet and venting valves, cooling fluid separator tank with triple separation system, pressure relief valve, minimum pressure / check valve, thermostatic valve and fluid filter within the cooling fluid circuit, fluid / compressed air combination cooler.

Refrigeration dryer (with T version)

Pressure dew point measurement via PT100 sensor and electronic level-controlled condensate drain with alarm contact as standard. Refrigerant compressor with energy-saving, cycling shutdown feature; linked to operational status of the compressor when inactive. Alternatively, continuous operation can be selected on site.

Electrical components

Ventilated IP 54 control cabinet, automatic star-delta starter, overload relay, control transformer.

SIGMA CONTROL 2

“Traffic light” LED indicators show operational status at a glance, plain text display, over 30 selectable languages, soft-touch keys with icons, fully automated monitoring and control. Selection of Dual, Quadro, Vario and Continuous control as standard. Interfaces: Ethernet; additional optional communication modules for Profibus DP, Modbus, Profinet and Devicenet. SD card slot for data-logging and updates. Reader and web server.

SIGMA AIR MANAGER 4.0

The further-refined adaptive 3-D^{advanced} Control predictively calculates and compares various operating scenarios and selects the most efficient to suit the compressed air application’s specific needs.

The SIGMA AIR MANAGER 4.0 therefore automatically and optimally adjusts flow rates and compressor energy consumption in response to current compressed air demand. This powerful feature is made possible by the integrated industrial PC with multi-core processor in combination with the adaptive 3-D^{advanced} Control. Furthermore, the SIGMA NETWORK bus converters (SBC) provide a host of possibilities to enable the system to be individually tailored to meet exact user requirements. The SBC can be equipped with digital and analogue input and output modules, as well as with SIGMA NETWORK ports, to enable seamless display of flow rate, pressure dew point, power or alarm message information.

Amongst other key features, the SIGMA AIR MANAGER 4.0 provides long-term data storage capability for reporting, controlling and audits, as well as for energy management tasks as per ISO 50001.

(See image to the right; excerpt from the SIGMA AIR MANAGER 4.0 brochure)

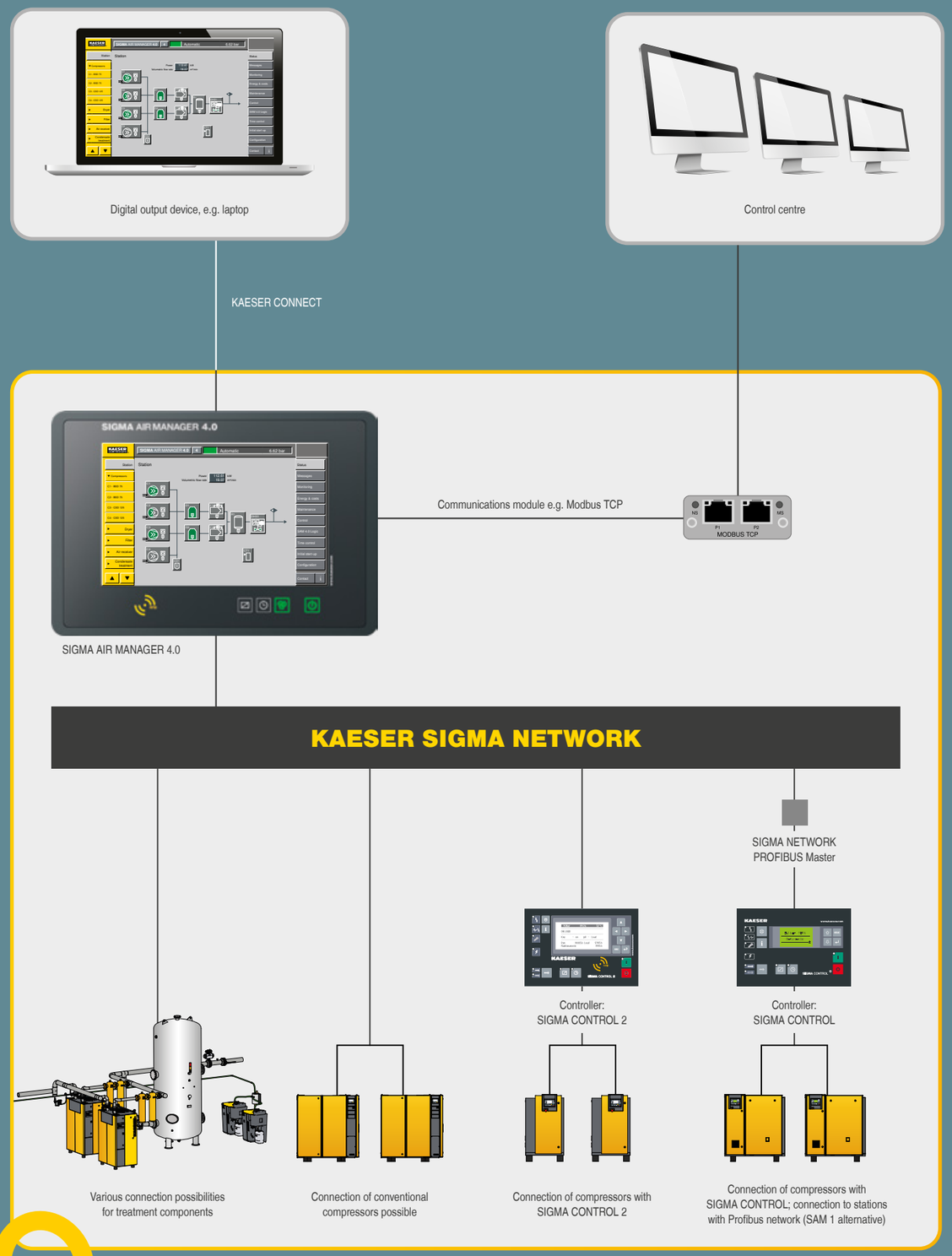

Secure data – secure business!

Technical specifications

Standard version

Model	Working pressure bar	Flow rate *) Overall package at operating pressure m³/min	Max. operating pressure bar	Drive motor rated power kW	Model Refrigeration dryer kW	Dimensions W x D x H mm	Compressed air connection	Sound pressure level **) dB(A)	Mass kg
SX 3	7.5	0.34	8	2.2	–	590 x 632 x 970	G ¾	59	140
	10	0.26	11						
SX 4	7.5	0.45	8	3	–	590 x 632 x 970	G ¾	60	140
	10	0.36	11						
	13	0.26	15						
SX 6	7.5	0.60	8	4	–	590 x 632 x 970	G ¾	61	145
	10	0.48	11						
	13	0.37	15						
SX 8	7.5	0.80	8	5.5	–	590 x 632 x 970	G ¾	64	155
	10	0.67	11						
	13	0.54	15						

T - Version with integrated refrigeration dryer (refrigerant R-513A)

SX 3 T	7.5	0.34	8	2.2	ABT 4	590 x 905 x 970	G 3/4	59	185
	10	0.26	11						
SX 4 T	7.5	0.45	8	3	ABT 4	590 x 905 x 970	G 3/4	60	185
	10	0.36	11						
	13	0.26	15						
SX 6 T	7.5	0.60	8	4	ABT 8	590 x 905 x 970	G 3/4	61	190
	10	0.48	11		ABT 4				
	13	0.37	15						
SX 8 T	7.5	0.80	8	5.5	ABT 8	590 x 905 x 970	G 3/4	64	200
	10	0.67	11						
	13	0.54	15		ABT 4				

AIRCENTER - Version with refrigeration dryer and air receiver

AIRCENTER 3	7.5	0.34	8	2.2	ABT 4	590 x 1090 x 1560	G ¾	59	285
	10	0.26	11						
AIRCENTER 4	7.5	0.45	8	3	ABT 4	590 x 1090 x 1560	G ¾	60	285
	10	0.36	11						
	13	0.26	15						
AIRCENTER 6	7.5	0.60	8	4	ABT 8	590 x 1090 x 1560	G ¾	61	290
	10	0.48	11		ABT 4				
	13	0.37	15						
AIRCENTER 8	7.5	0.80	8	5.5	ABT 8	590 x 1090 x 1560	G ¾	64	300
	10	0.67	11						
	13	0.54	15		ABT 4				

*) Flow rate complete system as per ISO 1217: 2009 Annex C/E: inlet pressure 1 bar (a), cooling and air inlet temperature +20 °C
**) Sound pressure level as per ISO 2151 and basic standard ISO 9614-2, tolerance: ±3dB (A)

Technical specifications for integrated refrigeration dryer

Model	Dryer power consumption kW	Pressure dew point °C	Refrigerant	Refrigerant fill volume kg	Greenhouse warming potential	CO_2 equivalent t	Hermetic refrigeration circuit
ABT 4	0.18	+3	R-513A	0.17	629	0.11	Yes
ABT 8	0.28	+3	R-513A	0.24	629	0.15	Yes

How it works

The air to be compressed passes through the intake air filter (1) and the intake valve (2) into the SIGMA PROFILE compressor airend (3). The compressor airend (3) is driven via belt drive (4) by a high-efficiency IE3 class electric motor (5). The cooling oil injected for cooling purposes during the compression process is re-separated from the air in the fluid separator tank (6). The compressed air flows through the fluid separator cartridge (7) and the minimum pressure check valve (MDRV) (8), into the compressed air aftercooler (9). The compressed air then leaves the system at the compressed air connection (10). The heat generated during the compression process is removed from the cooling oil via the fluid cooler (11) and dissipated into the environment using the drive motor fan (12). The cooling oil is then cleaned by the fluid filter (13). The thermostatic valve (14) ensures consistent operating temperature.

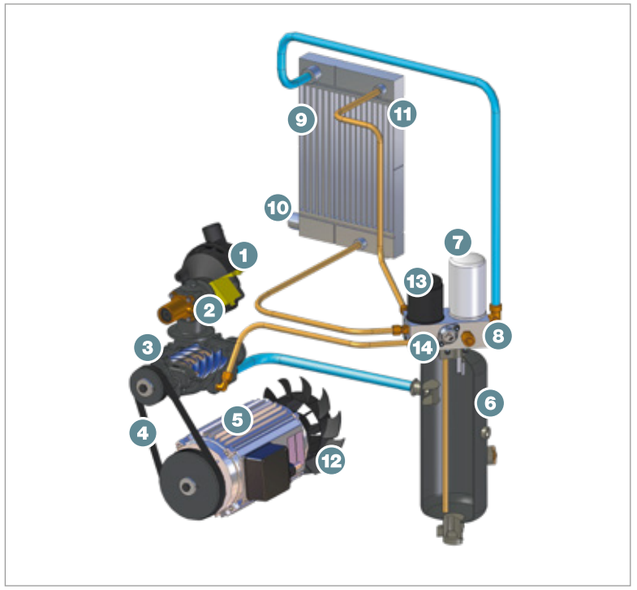

(1) Intake air filter
(2) Intake valve
(3) Airend
(4) Belt drive
(5) IE3 drive motor
(6) Fluid separator tank
(7) Fluid separator cartridge
(8) Minimum pressure check valve
(9) Compressed air aftercooler
(10) Compressed air connection
(11) Fluid cooler
(12) Fan
(13) Fluid filter
(14) Thermostatic valve

More compressed air for less energy

The world is our home

As one of the world's largest manufacturers of compressors, blowers and compressed air systems, KAESER KOMPRESSOREN is represented throughout the world by a comprehensive network of wholly owned subsidiaries and authorised distribution partners in over 140 countries.

By offering innovative, efficient and reliable products and services, KAESER KOMPRESSOREN's experienced consultants and engineers work in close partnership with customers to enhance their competitive edge and to develop progressive system concepts that continuously push the boundaries of performance and technology. Moreover, decades of knowledge and expertise from this industry-leading systems provider are made available to each and every customer via the KAESER group's advanced global IT network.

These advantages, coupled with KAESER's worldwide service organisation, ensure that every product operates at the peak of its performance at all times, providing optimal efficiency and maximum availability.

PT INDO KOMPRESIGMA
Jl Outer Ring Road No. 65 – Kembangan Utara
Jakarta 11610 – Indonesia
Tel: 62-21-2951 8888 – Fax: 62-21-2951 0000
E-mail: info_jkt@kaeserindo.com – www.kaeser.com

P-651/0ID Specifications are subject to change without notice /25