Compressed Air Treatment

Compressed air treatment diagrams for rotary screw compressors and reciprocating compressors

The perfect treatment components for every application

www.kaeser.com

Installation recommendations for pure compressed air

Rotary screw compressors

Compressed air treatment with refrigeration dryer (**pressure dew point down to +3 °C**)

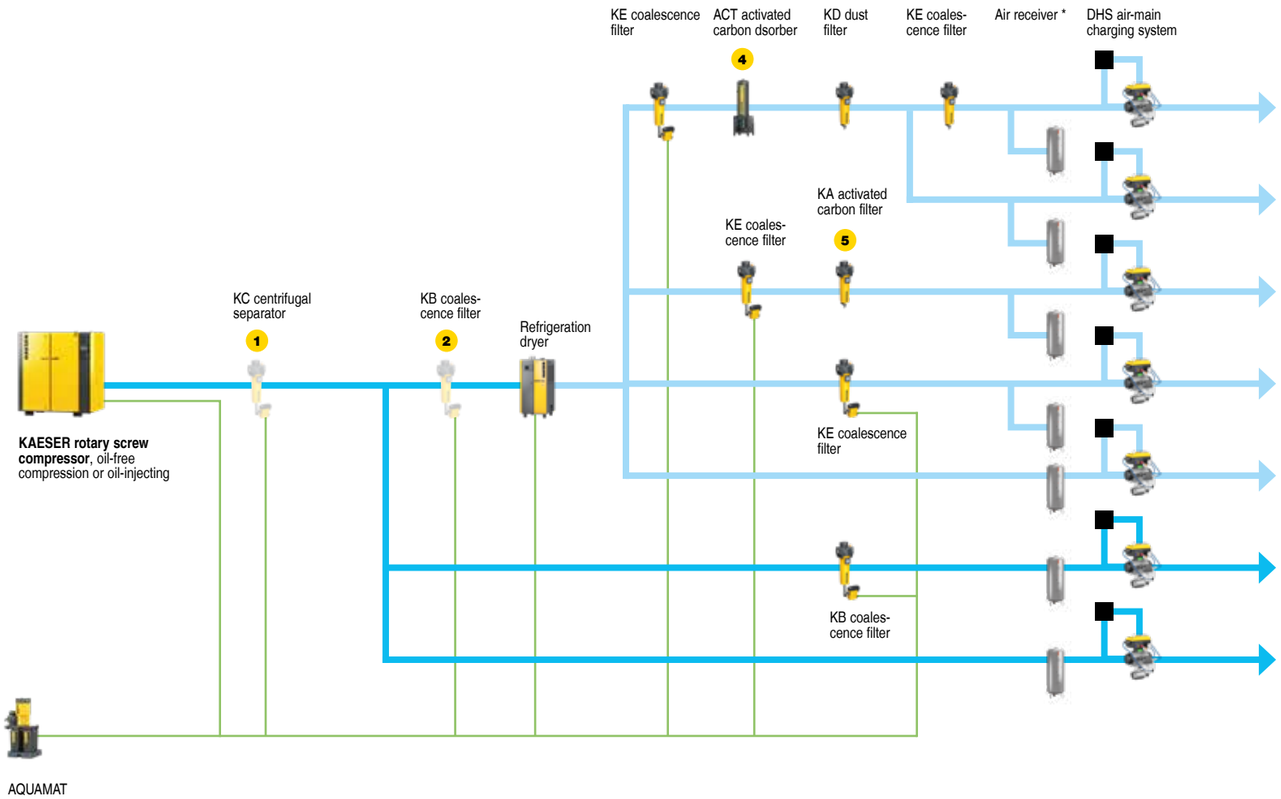

Choose the desired degree of treatment in accordance with your requirement/application:
Application examples: Selection of compressed air purity classes as per ISO 8573-1 (2010)

Achievable compressed air purity class: Particles	Water	Oil	Industry / Application
1	4	1	Pure-air and clean-room technology, dairies, breweries, food and beverage production
2	4	1	Especially clean conveying air, chemical plants
1	4	1	Weaving machines, photo labs, pharmaceuticals industry
1	4	2	Paint spraying, powder coating, packaging, control and instrument air
4	4	3	General works air, high-quality sand blasting
4	7-X [3]	3	Shot blasting
4-6	7-X [3]	3-4	Conveying air for wastewater systems

Compressed air purity classes as per ISO 8573-1 (2010):

Particles

Class	Max. particle count per m³ for particle size d in µm *)		
	0.1 < d ≤ 0.5	0.5 < d ≤ 1.0	1.0 < d ≤ 5.0
0	Consult KAESER for applications such as pure-air and clean-room technology		
1	≤ 20,000	≤ 400	≤ 10
2	≤ 400,000	≤ 6,000	≤ 100
3	Not defined	≤ 90,000	≤ 1,000
4	Not defined	Not defined	≤ 10,000
5	Not defined	Not defined	≤ 100,000
Class	**Particle concentration C_p in mg/m³ *)**		
6	$0 < C_p \leq 5$		
7	$5 < C_p \leq 10$		
X	$C_p > 10$		

Water

Class	Pressure dew point in °C
0	Consult KAESER for applications such as pure-air and clean-room technology
1	≤ -70 °C
2	≤ -40 °C
3	≤ -20 °C
4	≤ +3 °C
5	≤ +7 °C
6	≤ +10 °C
Class	**Concentration of liquid water C_W in g/m³ *)**
7	$C_W \leq 0.5$
8	$0.5 < C_W \leq 5$
9	$5 < C_W \leq 10$
X	$C_W > 10$

Oil

Class	Total oil concentration (liquid, aerosol + gaseous) [mg/m³] *)
0	Consult KAESER for applications such as pure-air and clean-room technology
1	≤ 0.01
2	≤ 0.1
3	≤ 1.0
4	≤ 5.0
X	> 5.0

*) At reference conditions +20 °C, 1 bar(a), 0% humidity.

Installation for constant air demand

Design based on consumption

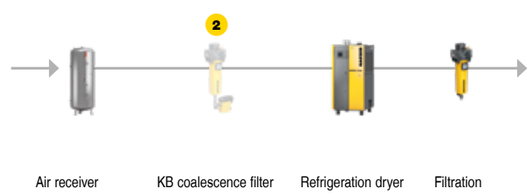

1. No KC required on compressors with integrated centrifugal separator.
2. KB filter stage installed upstream for third-party compressors or contaminated / heavily corroded pipework.
3. Dependent on cooling temperature.
4. Service life at nominal conditions 12,000 h.
5. Service life at nominal conditions 1,000 h.

* Where there are stringent requirements in relation to compressed air quality, the air receiver should always be installed in a branch line downstream from the treatment stage to prevent the entrainment of deposits.

Installation recommendations for pure compressed air

Rotary screw compressors

Compressed air treatment with desiccant dryer (**pressure dew point down to -70 °C, e.g. for applications at risk from freezing**)

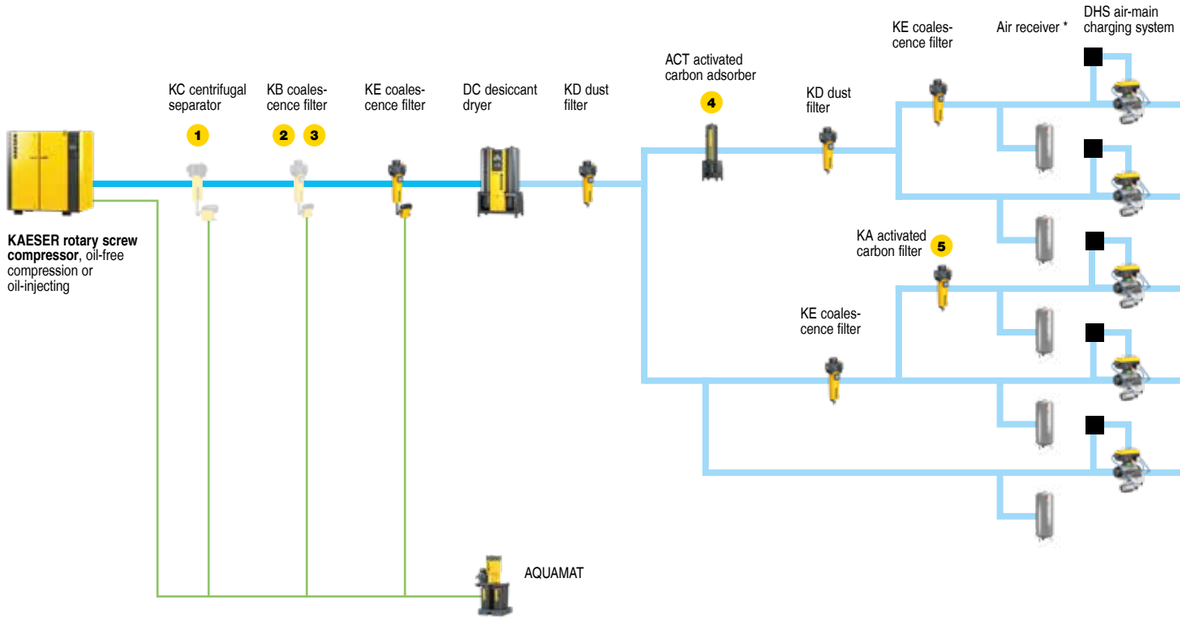

Choose the desired degree of treatment in accordance with your requirement/application:
Application examples: Selection of compressed air purity classes as per ISO 8573-1 (2010)

Achievable compressed air purity class: Particles	Water	Oil	Industry / Application
1	1-3	1	Pure-air and clean-room technology, dairies, breweries, food and beverage production
2	1-3	1	Paint-spraying systems
1	1-3	1	Process air, pharmaceuticals industry
1	1-3	2	Photo labs
2	1-3	2	Especially dry conveying air, paint spraying, fine pressure controllers

Installation for constant air demand

Design based on consumption

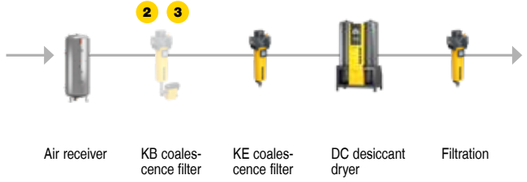

Compressed air purity classes as per ISO 8573-1 (2010):

Particles

Class	Max. particle count per m³ for particle size d in µm *)		
	0.1 < d ≤ 0.5	0.5 < d ≤ 1.0	1.0 < d ≤ 5.0
0	Consult KAESER for applications such as pure-air and clean-room technology		
1	≤ 20,000	≤ 400	≤ 10
2	≤ 400,000	≤ 6,000	≤ 100
3	Not defined	≤ 90,000	≤ 1,000
4	Not defined	Not defined	≤ 10,000
5	Not defined	Not defined	≤ 100,000
Class	**Particle concentration C_p in mg/m³ *)**		
6	$0 < C_p \leq 5$		
7	$5 < C_p \leq 10$		
X	$C_p > 10$		

Water

Class	Pressure dew point in °C
0	Consult KAESER for applications such as pure-air and clean-room technology
1	≤ -70 °C
2	≤ -40 °C
3	≤ -20 °C
4	≤ +3 °C
5	≤ +7 °C
6	≤ +10 °C
Class	**Concentration of liquid water C_W in g/m³ *)**
7	$C_W \leq 0.5$
8	$0.5 < C_W \leq 5$
9	$5 < C_W \leq 10$
X	$C_W > 10$

Oil

Class	Total oil concentration (liquid, aerosol + gaseous) [mg/m³] *)
0	Consult KAESER for applications such as pure-air and clean-room technology
1	≤ 0.01
2	≤ 0.1
3	≤ 1.0
4	≤ 5.0
X	> 5.0

*) At reference conditions +20 °C, 1 bar(a), 0% humidity.

1. No KC required on compressors with integrated centrifugal separator.
2. KB filter stage installed upstream for third-party compressors or contaminated / heavily corroded pipework.
3. KB filter stage installed upstream for critical applications requiring high compressed air purity.
4. Service life at nominal conditions 12,000 h.
5. Service life at nominal conditions 1,000 h.

* Where there are stringent requirements in relation to compressed air quality, the air receiver should always be installed in a branch line downstream from the treatment stage to prevent the entrainment of deposits.

Installation recommendations for pure compressed air

Reciprocating compressors

Choose the desired degree of treatment in accordance with your requirement/application:
Application examples: Selection of compressed air purity classes as per ISO 8573-1 (2010)

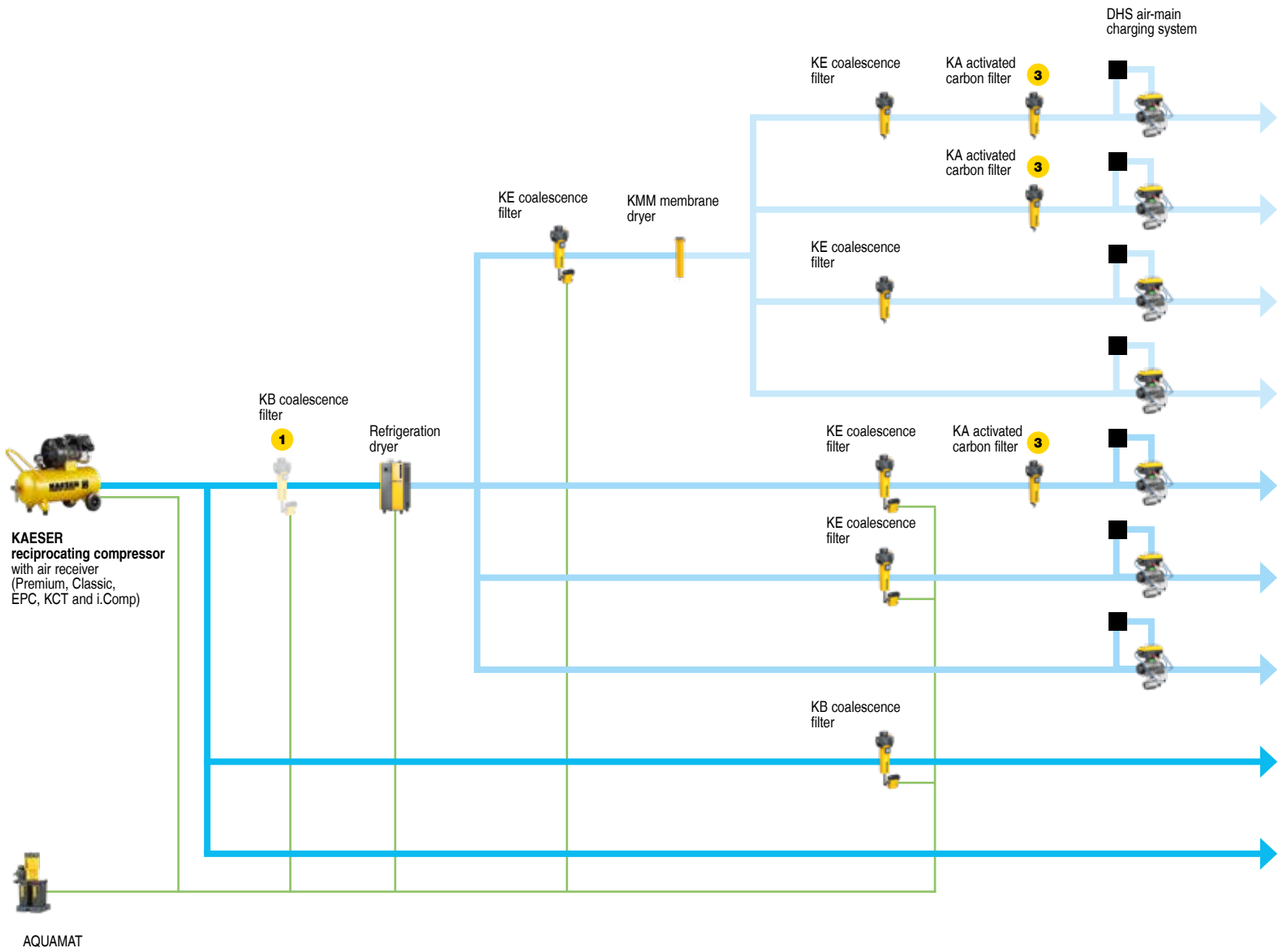

Achievable compressed air purity class: Particles	Water	Oil	Industry / Application
1	2-3 [2]	1	Pure-air and clean-room technology, pharmaceuticals industry, food and beverage production
2	2-3 [2]	1	Paint-spraying systems
1	2-3 [2]	2	Photo labs
2	2-3 [2]	2	Especially dry conveying air, paint spraying, fine pressure controllers
1	4	1	Weaving machines, photo labs, pharmaceuticals industry
1	4	2	Paint spraying, powder coating, packaging, control and instrument air
4	4	2-X [4]	General works air, high-quality sand blasting
4	7-X	3	Shot blasting
5-X	7-X	3-X [4]	Conveying air for wastewater systems

Compressed air purity classes as per ISO 8573-1 (2010):

Particles

Class	Max. particle count per m³ for particle size d in µm *)		
	0.1 < d ≤ 0.5	0.5 < d ≤ 1.0	1.0 < d ≤ 5.0
0	Consult KAESER for applications such as pure-air and clean-room technology		
1	≤ 20,000	≤ 400	≤ 10
2	≤ 400,000	≤ 6,000	≤ 100
3	Not defined	≤ 90,000	≤ 1,000
4	Not defined	Not defined	≤ 10,000
5	Not defined	Not defined	≤ 100,000
Class	**Particle concentration C_p in mg/m³ *)**		
6	$0 < C_p \leq 5$		
7	$5 < C_p \leq 10$		
X	$C_p > 10$		

Water

Class	Pressure dew point in °C
0	Consult KAESER for applications such as pure-air and clean-room technology
1	≤ -70 °C
2	≤ -40 °C
3	≤ -20 °C
4	≤ +3 °C
5	≤ +7 °C
6	≤ +10 °C
Class	**Concentration of liquid water C_W in g/m³ *)**
7	$C_W \leq 0.5$
8	$0.5 < C_W \leq 5$
9	$5 < C_W \leq 10$
X	$C_W > 10$

Oil

Class	Total oil concentration (liquid, aerosol + gaseous) [mg/m³] *)
0	Consult KAESER for applications such as pure-air and clean-room technology
1	≤ 0.01
2	≤ 0.1
3	≤ 1.0
4	≤ 5.0
X	> 5.0

*) At reference conditions +20 °C, 1 bar(a), 0% humidity.

1. KB filter stage installed upstream for third-party compressors or contaminated / heavily corroded pipework.
2. Pressure dew point in accordance with inlet temperature, inlet pressure dew point and purge air volume.
3. Service life at nominal conditions 1,000 h.
4. Dependent on the contaminants drawn in and on the compressor.

Installation recommendations for pure compressed air

Boosters

Choose the desired degree of treatment in accordance with your requirement/application:
Application examples: Selection of compressed air purity classes as per ISO 8573-1 (2010)

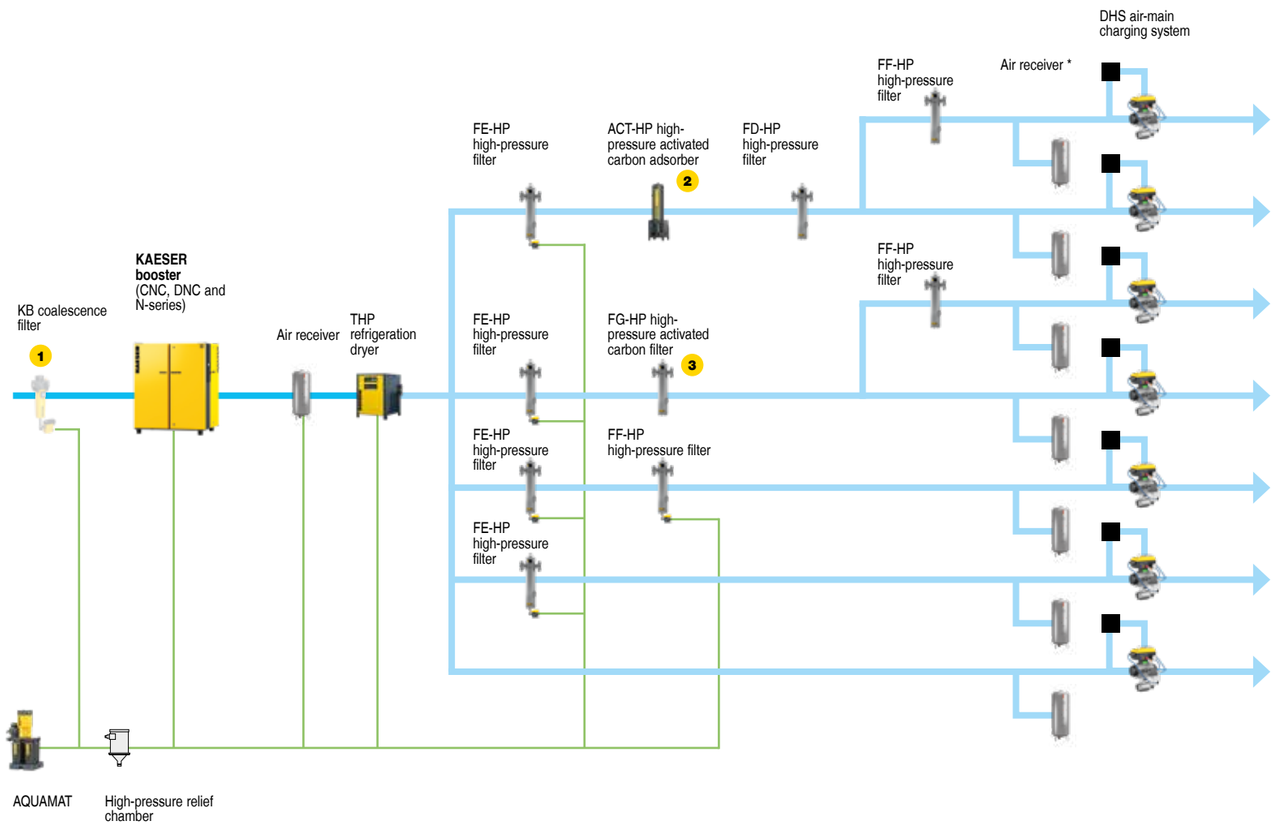

Achievable compressed air purity class: Particles	Water	Oil	Industry / Application
1	4	1	Clean-room technology
3	4	1	PET bottle production
1	4	1	Pure-air and clean-room technology, pharmaceuticals industry, food and beverage production
2	4	1	Paint-spraying systems
1	4	2	Weaving machines, photo labs, pharmaceuticals industry
2	4	2	Paint spraying, powder coating, packaging, control and instrument air
4-5	4	4-X	General works air, high-quality sand blasting

Compressed air purity classes as per ISO 8573-1 (2010):

Particles

Class	Max. particle count per m³ for particle size d in µm *)		
	0.1 < d ≤ 0.5	0.5 < d ≤ 1.0	1.0 < d ≤ 5.0
0	Consult KAESER for applications such as pure-air and clean-room technology		
1	≤ 20,000	≤ 400	≤ 10
2	≤ 400,000	≤ 6,000	≤ 100
3	Not defined	≤ 90,000	≤ 1,000
4	Not defined	Not defined	≤ 10,000
5	Not defined	Not defined	≤ 100,000
Class	**Particle concentration C_p in mg/m³ *)**		
6	$0 < C_p \leq 5$		
7	$5 < C_p \leq 10$		
X	$C_p > 10$		

Water

Class	Pressure dew point in °C
0	Consult KAESER for applications such as pure-air and clean-room technology
1	≤ -70 °C
2	≤ -40 °C
3	≤ -20 °C
4	≤ +3 °C
5	≤ +7 °C
6	≤ +10 °C
Class	**Concentration of liquid water C_W in g/m³ *)**
7	$C_W \leq 0.5$
8	$0.5 < C_W \leq 5$
9	$5 < C_W \leq 10$
X	$C_W > 10$

Oil

Class	Total oil concentration (liquid, aerosol + gaseous) [mg/m³] *)
0	Consult KAESER for applications such as pure-air and clean-room technology
1	≤ 0.01
2	≤ 0.1
3	≤ 1.0
4	≤ 5.0
X	> 5.0

*) At reference conditions +20 °C, 1 bar(a), 0% humidity.

1. KB filter stage installed upstream for third-party compressors or contaminated / heavily corroded pipework.
2. Service life at nominal conditions 12,000 h.
3. Service life at nominal conditions 1,000 h.

* Where there are stringent requirements in relation to compressed air quality, the air receiver should always be installed in a branch line downstream from the treatment stage to prevent the entrainment of deposits.

Compressed air station: Low and high pressure

Illustration shows from left to right:

(1) SIGMA AIR MANAGER 4.0 compressed air management system
(2) Rotary screw compressor
(3) Air receiver
(4) SECOTEC energy-saving refrigeration dryer
(5) KE coalescence filter with electronic ECO-DRAIN condensate drain, KA activated carbon filter
(6) DHS 4.0 air-main charging system
(7) AQUAMAT i.CF oil/water separator
(8) DN booster
(9) High-pressure air receiver
(10) THP refrigeration dryer
(11) FE-HP coalescence filter with electronic ECO-DRAIN condensate drain, FG-HP activated carbon filter
(12) AQUAMAT i.CF oil/water separator
(13) High-pressure relief chamber
(14) DHS 4.0 air-main charging system

More compressed air for less energy

The world is our home

As one of the world's largest manufacturers of compressors, blowers and compressed air systems, KAESER KOMPRESSOREN is represented throughout the world by a comprehensive network of wholly owned subsidiaries and authorised distribution partners in over 140 countries.

By offering innovative, efficient and reliable products and services, KAESER KOMPRESSOREN's experienced consultants and engineers work in close partnership with customers to enhance their competitive edge and to develop progressive system concepts that continuously push the boundaries of performance and technology. Moreover, decades of knowledge and expertise from this industry-leading systems provider are made available to each and every customer via the KAESER group's advanced global IT network.

These advantages, coupled with KAESER's worldwide service organisation, ensure that every product operates at the peak of its performance at all times, providing optimal efficiency and maximum availability.

TÜVRheinland CERTIFIED
Management System
ISO 9001:2015
ISO 14001:2015
www.tuv.com
ID 9108616471

KAESER COMPRESSORS Australia Pty. Ltd.
Locked Bag 1406 – Dandenong South – Vic. 3164
45 Zenith Road – Dandenong South – Vic. 3175
Phone: +61 39791 5999 – Fax: +61 39791 5733
au.kaeser.com – E-mail: info.australia@kaeser.com

P-711AUS Specifications subject to change without notice. 5/26