# Compressed Air Treatment

**Compressed air treatment diagrams for rotary screw compressors and reciprocating compressors**

The perfect treatment components for every application

**www.kaeser.com**

# Installation recommendations for pure compressed air

## Rotary screw compressors

Compressed air treatment with refrigeration dryer (**pressure dew point down to +3 °C**)

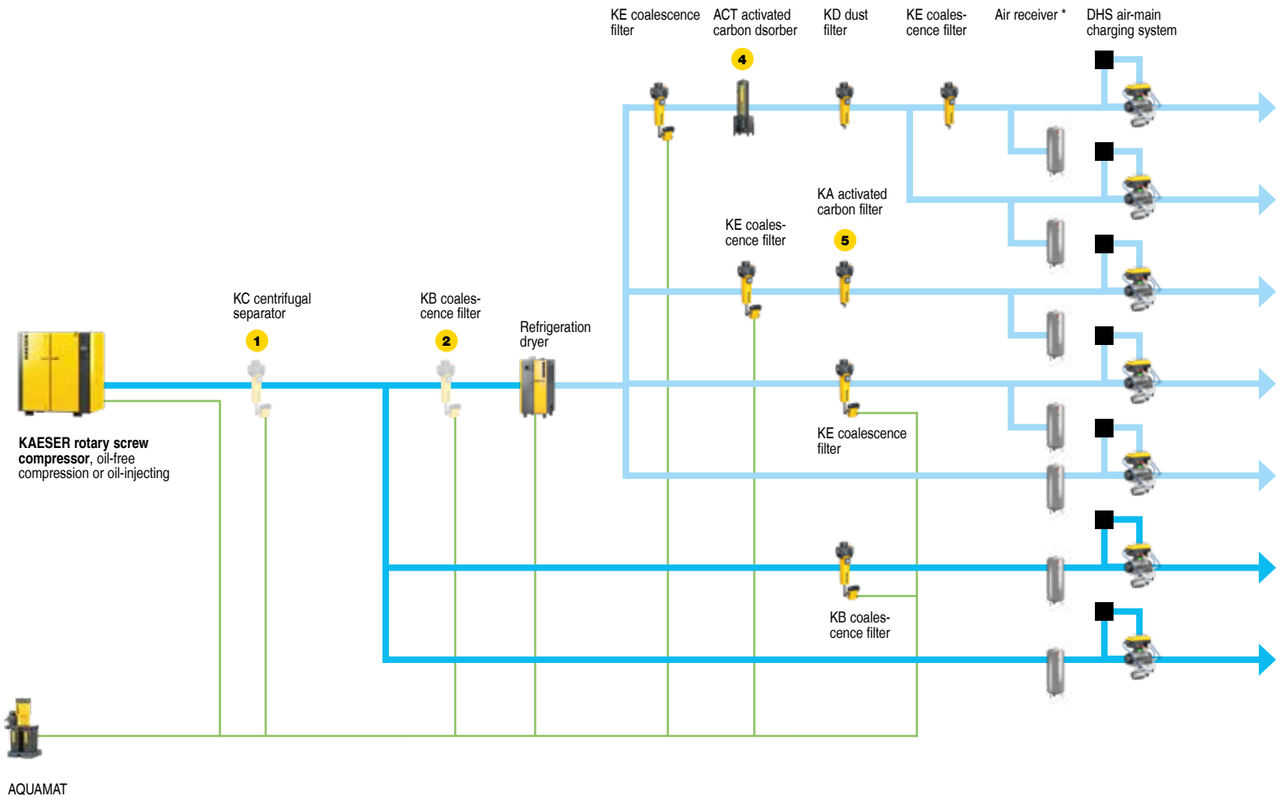


**Choose the desired degree of treatment in accordance with your requirement/application:**
Application examples: Selection of compressed air purity classes as per ISO 8573-1 (2010)

| Achievable compressed air purity class: Particles | Water | Oil | Industry / Application |
|---|---|---|---|
| 1 | 4 | 1 | Pure-air and clean-room technology, dairies, breweries, food and beverage production |
| 2 | 4 | 1 | Especially clean conveying air, chemical plants |
| 1 | 4 | 1 | Weaving machines, photo labs, pharmaceuticals industry |
| 1 | 4 | 2 | Paint spraying, powder coating, packaging, control and instrument air |
| 4 | 4 | 3 | General works air, high-quality sand blasting |
| 4 | 7-X [3] | 3 | Shot blasting |
| 4-6 | 7-X [3] | 3-4 | Conveying air for wastewater systems |

**Compressed air purity classes as per ISO 8573-1 (2010):**

### Particles

| Class | Max. particle count per m³ for particle size d in µm *) | | |
|---|---|---|---|
| | 0.1 < d ≤ 0.5 | 0.5 < d ≤ 1.0 | 1.0 < d ≤ 5.0 |
| 0 | Consult KAESER for applications such as pure-air and clean-room technology | | |
| 1 | ≤ 20,000 | ≤ 400 | ≤ 10 |
| 2 | ≤ 400,000 | ≤ 6,000 | ≤ 100 |
| 3 | Not defined | ≤ 90,000 | ≤ 1,000 |
| 4 | Not defined | Not defined | ≤ 10,000 |
| 5 | Not defined | Not defined | ≤ 100,000 |
| **Class** | **Particle concentration $C_p$ in mg/m³ *)** | | |
| 6 | $0 < C_p \leq 5$ | | |
| 7 | $5 < C_p \leq 10$ | | |
| X | $C_p > 10$ | | |

### Water

| Class | Pressure dew point in °C |
|---|---|
| 0 | Consult KAESER for applications such as pure-air and clean-room technology |
| 1 | ≤ -70 °C |
| 2 | ≤ -40 °C |
| 3 | ≤ -20 °C |
| 4 | ≤ +3 °C |
| 5 | ≤ +7 °C |
| 6 | ≤ +10 °C |
| **Class** | **Concentration of liquid water $C_W$ in g/m³ *)** |
| 7 | $C_W \leq 0.5$ |
| 8 | $0.5 < C_W \leq 5$ |
| 9 | $5 < C_W \leq 10$ |
| X | $C_W > 10$ |

### Oil

| Class | Total oil concentration (liquid, aerosol + gaseous) [mg/m³] *) |
|---|---|
| 0 | Consult KAESER for applications such as pure-air and clean-room technology |
| 1 | ≤ 0.01 |
| 2 | ≤ 0.1 |
| 3 | ≤ 1.0 |
| 4 | ≤ 5.0 |
| X | > 5.0 |

*) At reference conditions +20 °C, 1 bar(a), 0% humidity.

### Installation for constant air demand

**Design based on consumption**

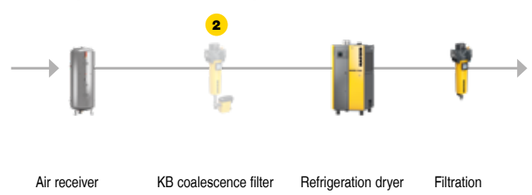


1. No KC required on compressors with integrated centrifugal separator.
2. KB filter stage installed upstream for third-party compressors or contaminated / heavily corroded pipework.
3. Dependent on cooling temperature.
4. Service life at nominal conditions 12,000 h.
5. Service life at nominal conditions 1,000 h.

* Where there are stringent requirements in relation to compressed air quality, the air receiver should always be installed in a branch line downstream from the treatment stage to prevent the entrainment of deposits.

# Installation recommendations for pure compressed air

## Rotary screw compressors

Compressed air treatment with desiccant dryer (**pressure dew point down to -70 °C, e.g. for applications at risk from freezing**)

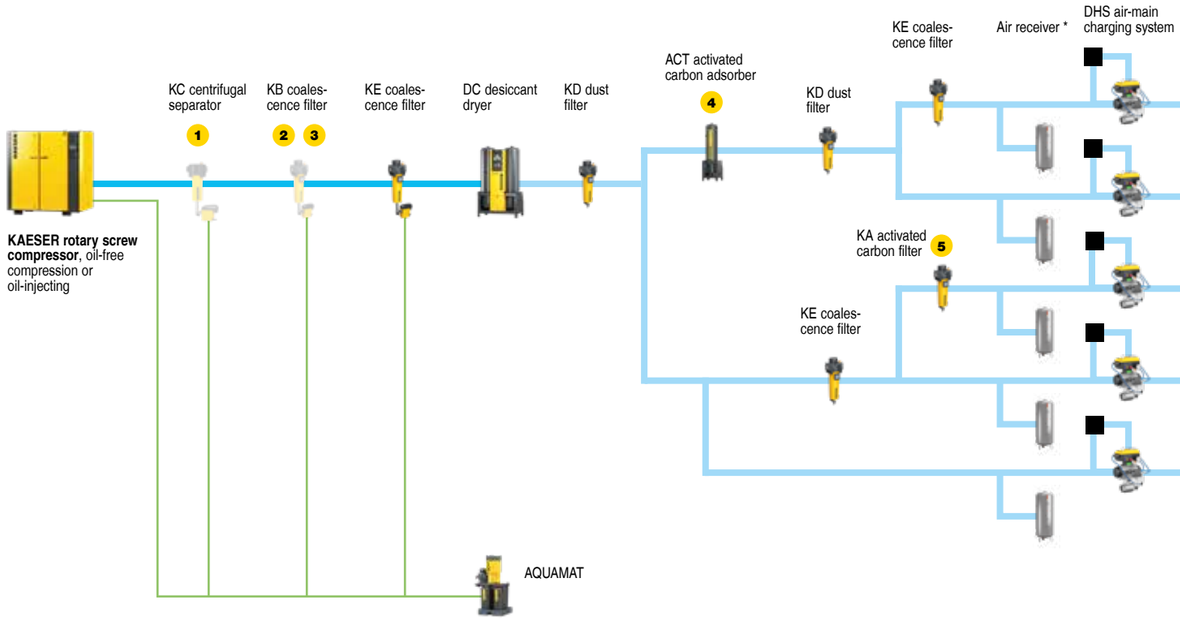


**Choose the desired degree of treatment in accordance with your requirement/application:**
Application examples: Selection of compressed air purity classes as per ISO 8573-1 (2010)

| Achievable compressed air purity class: Particles | Water | Oil | Industry / Application |
|---|---|---|---|
| 1 | 1-3 | 1 | Pure-air and clean-room technology, dairies, breweries, food and beverage production |
| 2 | 1-3 | 1 | Paint-spraying systems |
| 1 | 1-3 | 1 | Process air, pharmaceuticals industry |
| 1 | 1-3 | 2 | Photo labs |
| 2 | 1-3 | 2 | Especially dry conveying air, paint spraying, fine pressure controllers |

### Installation for constant air demand

**Design based on consumption**

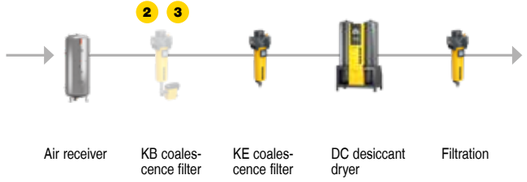


**Compressed air purity classes as per ISO 8573-1 (2010):**

**Particles**

| Class | Max. particle count per m³ for particle size d in µm *) | | |
|---|---|---|---|
| | 0.1 < d ≤ 0.5 | 0.5 < d ≤ 1.0 | 1.0 < d ≤ 5.0 |
| 0 | Consult KAESER for applications such as pure-air and clean-room technology | | |
| 1 | ≤ 20,000 | ≤ 400 | ≤ 10 |
| 2 | ≤ 400,000 | ≤ 6,000 | ≤ 100 |
| 3 | Not defined | ≤ 90,000 | ≤ 1,000 |
| 4 | Not defined | Not defined | ≤ 10,000 |
| 5 | Not defined | Not defined | ≤ 100,000 |
| **Class** | **Particle concentration $C_p$ in mg/m³ *)** | | |
| 6 | $0 < C_p \leq 5$ | | |
| 7 | $5 < C_p \leq 10$ | | |
| X | $C_p > 10$ | | |

**Water**

| Class | Pressure dew point in °C |
|---|---|
| 0 | Consult KAESER for applications such as pure-air and clean-room technology |
| 1 | ≤ -70 °C |
| 2 | ≤ -40 °C |
| 3 | ≤ -20 °C |
| 4 | ≤ +3 °C |
| 5 | ≤ +7 °C |
| 6 | ≤ +10 °C |
| **Class** | **Concentration of liquid water $C_W$ in g/m³ *)** |
| 7 | $C_W \leq 0.5$ |
| 8 | $0.5 < C_W \leq 5$ |
| 9 | $5 < C_W \leq 10$ |
| X | $C_W > 10$ |

**Oil**

| Class | Total oil concentration (liquid, aerosol + gaseous) [mg/m³] *) |
|---|---|
| 0 | Consult KAESER for applications such as pure-air and clean-room technology |
| 1 | ≤ 0.01 |
| 2 | ≤ 0.1 |
| 3 | ≤ 1.0 |
| 4 | ≤ 5.0 |
| X | > 5.0 |

*) At reference conditions +20 °C, 1 bar(a), 0% humidity.

1. No KC required on compressors with integrated centrifugal separator.
2. KB filter stage installed upstream for third-party compressors or contaminated / heavily corroded pipework.
3. KB filter stage installed upstream for critical applications requiring high compressed air purity.
4. Service life at nominal conditions 12,000 h.
5. Service life at nominal conditions 1,000 h.

* Where there are stringent requirements in relation to compressed air quality, the air receiver should always be installed in a branch line downstream from the treatment stage to prevent the entrainment of deposits.

# Installation recommendations for pure compressed air

## Reciprocating compressors

**Choose the desired degree of treatment in accordance with your requirement/application:**
Application examples: Selection of compressed air purity classes as per ISO 8573-1 (2010)

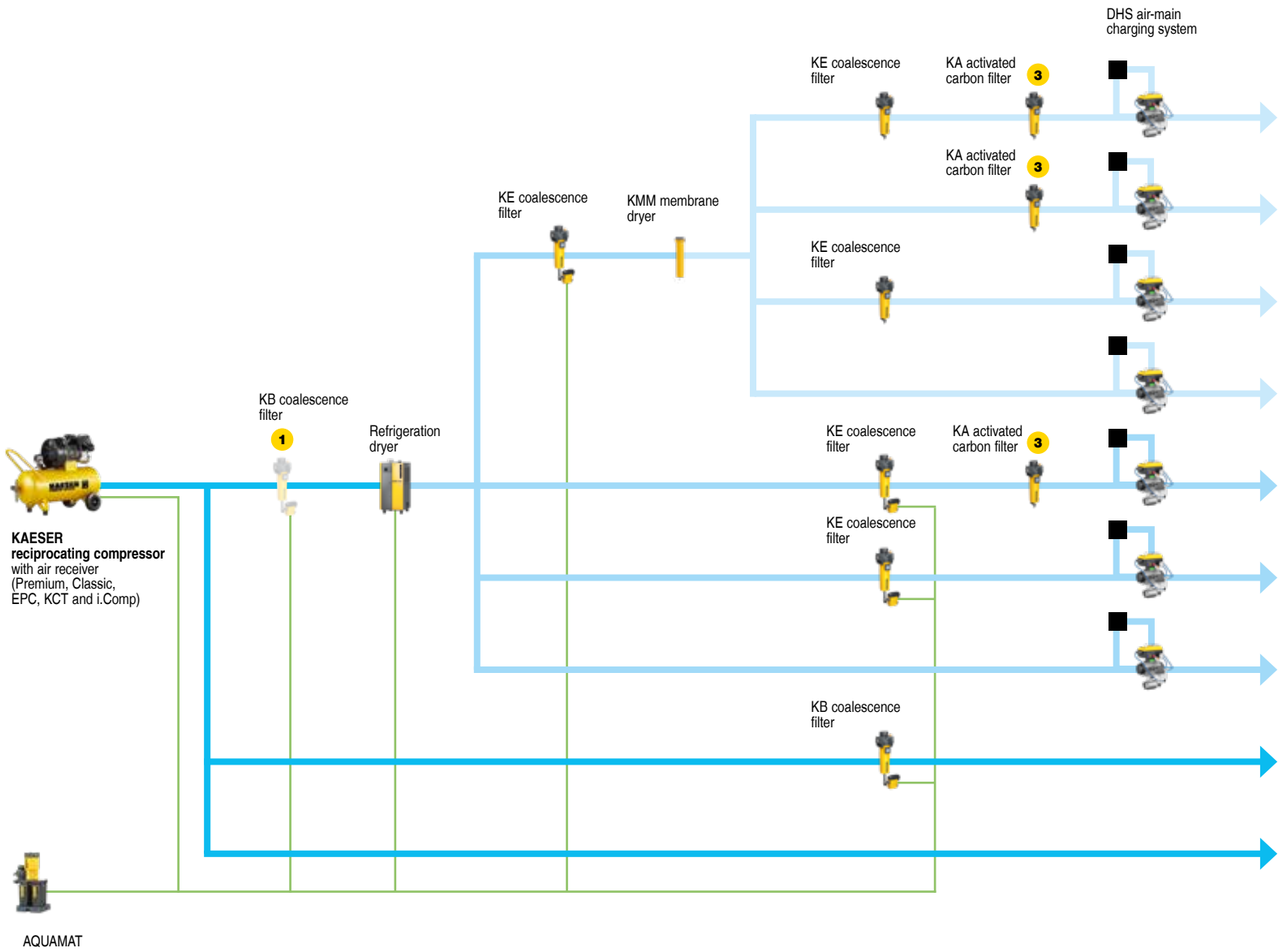


| Achievable compressed air purity class: Particles | Water | Oil | Industry / Application |
|---|---|---|---|
| 1 | 2-3 [2] | 1 | Pure-air and clean-room technology, pharmaceuticals industry, food and beverage production |
| 2 | 2-3 [2] | 1 | Paint-spraying systems |
| 1 | 2-3 [2] | 2 | Photo labs |
| 2 | 2-3 [2] | 2 | Especially dry conveying air, paint spraying, fine pressure controllers |
| 1 | 4 | 1 | Weaving machines, photo labs, pharmaceuticals industry |
| 1 | 4 | 2 | Paint spraying, powder coating, packaging, control and instrument air |
| 4 | 4 | 2-X [4] | General works air, high-quality sand blasting |
| 4 | 7-X | 3 | Shot blasting |
| 5-X | 7-X | 3-X [4] | Conveying air for wastewater systems |

**Compressed air purity classes as per ISO 8573-1 (2010):**

### Particles

| Class | Max. particle count per m³ for particle size d in µm *) | | |
|---|---|---|---|
| | 0.1 < d ≤ 0.5 | 0.5 < d ≤ 1.0 | 1.0 < d ≤ 5.0 |
| 0 | Consult KAESER for applications such as pure-air and clean-room technology | | |
| 1 | ≤ 20,000 | ≤ 400 | ≤ 10 |
| 2 | ≤ 400,000 | ≤ 6,000 | ≤ 100 |
| 3 | Not defined | ≤ 90,000 | ≤ 1,000 |
| 4 | Not defined | Not defined | ≤ 10,000 |
| 5 | Not defined | Not defined | ≤ 100,000 |
| **Class** | **Particle concentration $C_p$ in mg/m³ *)** | | |
| 6 | $0 < C_p \leq 5$ | | |
| 7 | $5 < C_p \leq 10$ | | |
| X | $C_p > 10$ | | |

### Water

| Class | Pressure dew point in °C |
|---|---|
| 0 | Consult KAESER for applications such as pure-air and clean-room technology |
| 1 | ≤ -70 °C |
| 2 | ≤ -40 °C |
| 3 | ≤ -20 °C |
| 4 | ≤ +3 °C |
| 5 | ≤ +7 °C |
| 6 | ≤ +10 °C |
| **Class** | **Concentration of liquid water $C_W$ in g/m³ *)** |
| 7 | $C_W \leq 0.5$ |
| 8 | $0.5 < C_W \leq 5$ |
| 9 | $5 < C_W \leq 10$ |
| X | $C_W > 10$ |

### Oil

| Class | Total oil concentration (liquid, aerosol + gaseous) [mg/m³] *) |
|---|---|
| 0 | Consult KAESER for applications such as pure-air and clean-room technology |
| 1 | ≤ 0.01 |
| 2 | ≤ 0.1 |
| 3 | ≤ 1.0 |
| 4 | ≤ 5.0 |
| X | > 5.0 |

*) At reference conditions +20 °C, 1 bar(a), 0% humidity.

1. KB filter stage installed upstream for third-party compressors or contaminated / heavily corroded pipework.
2. Pressure dew point in accordance with inlet temperature, inlet pressure dew point and purge air volume.
3. Service life at nominal conditions 1,000 h.
4. Dependent on the contaminants drawn in and on the compressor.

# Installation recommendations for pure compressed air

## Boosters

**Choose the desired degree of treatment in accordance with your requirement/application:**
Application examples: Selection of compressed air purity classes as per ISO 8573-1 (2010)

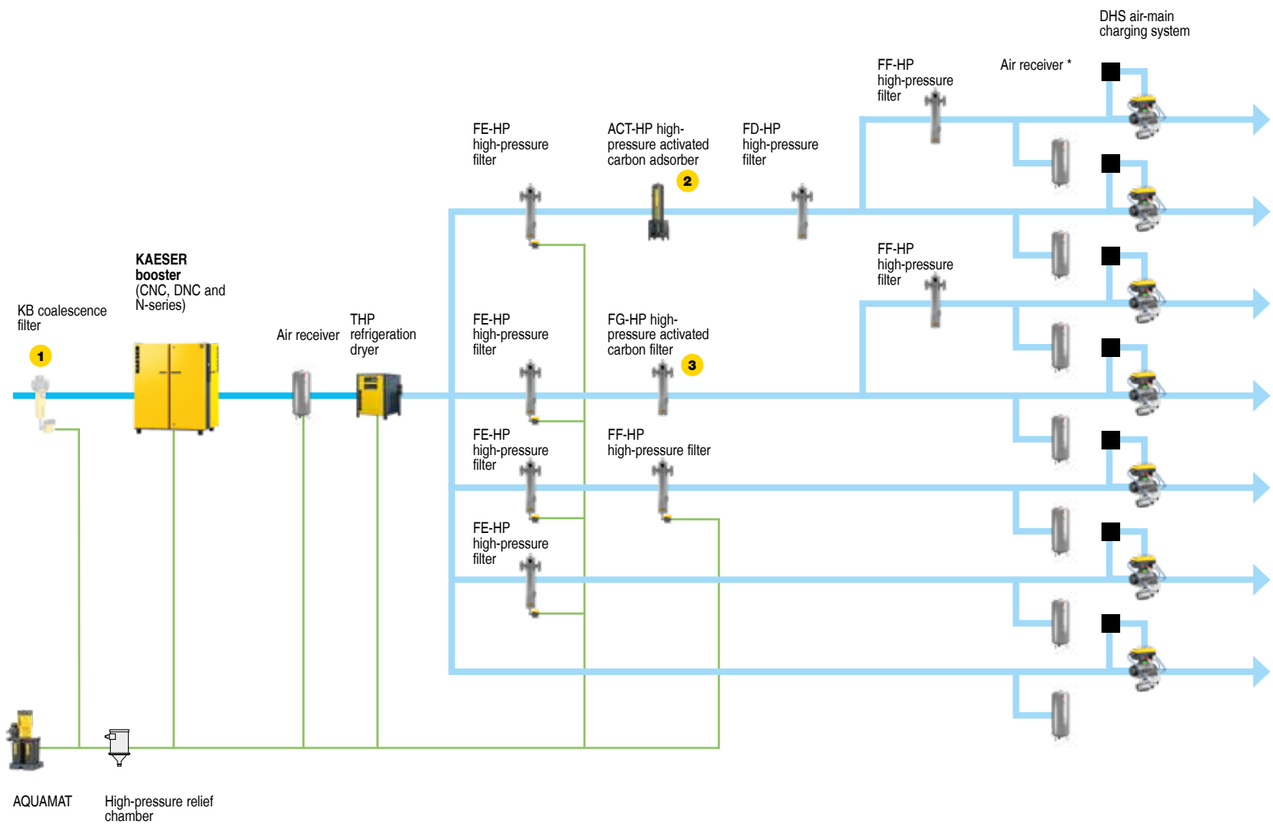


| Achievable compressed air purity class: Particles | Water | Oil | Industry / Application |
|---|---|---|---|
| 1 | 4 | 1 | Clean-room technology |
| 3 | 4 | 1 | PET bottle production |
| 1 | 4 | 1 | Pure-air and clean-room technology, pharmaceuticals industry, food and beverage production |
| 2 | 4 | 1 | Paint-spraying systems |
| 1 | 4 | 2 | Weaving machines, photo labs, pharmaceuticals industry |
| 2 | 4 | 2 | Paint spraying, powder coating, packaging, control and instrument air |
| 4-5 | 4 | 4-X | General works air, high-quality sand blasting |

**Compressed air purity classes as per ISO 8573-1 (2010):**

### Particles

| Class | Max. particle count per m³ for particle size d in µm *) | | |
|---|---|---|---|
| | 0.1 < d ≤ 0.5 | 0.5 < d ≤ 1.0 | 1.0 < d ≤ 5.0 |
| 0 | Consult KAESER for applications such as pure-air and clean-room technology | | |
| 1 | ≤ 20,000 | ≤ 400 | ≤ 10 |
| 2 | ≤ 400,000 | ≤ 6,000 | ≤ 100 |
| 3 | Not defined | ≤ 90,000 | ≤ 1,000 |
| 4 | Not defined | Not defined | ≤ 10,000 |
| 5 | Not defined | Not defined | ≤ 100,000 |
| **Class** | **Particle concentration $C_p$ in mg/m³ *)** | | |
| 6 | $0 < C_p \leq 5$ | | |
| 7 | $5 < C_p \leq 10$ | | |
| X | $C_p > 10$ | | |

### Water

| Class | Pressure dew point in °C |
|---|---|
| 0 | Consult KAESER for applications such as pure-air and clean-room technology |
| 1 | ≤ -70 °C |
| 2 | ≤ -40 °C |
| 3 | ≤ -20 °C |
| 4 | ≤ +3 °C |
| 5 | ≤ +7 °C |
| 6 | ≤ +10 °C |
| **Class** | **Concentration of liquid water $C_W$ in g/m³ *)** |
| 7 | $C_W \leq 0.5$ |
| 8 | $0.5 < C_W \leq 5$ |
| 9 | $5 < C_W \leq 10$ |
| X | $C_W > 10$ |

### Oil

| Class | Total oil concentration (liquid, aerosol + gaseous) [mg/m³] *) |
|---|---|
| 0 | Consult KAESER for applications such as pure-air and clean-room technology |
| 1 | ≤ 0.01 |
| 2 | ≤ 0.1 |
| 3 | ≤ 1.0 |
| 4 | ≤ 5.0 |
| X | > 5.0 |

*) At reference conditions +20 °C, 1 bar(a), 0% humidity.

1. KB filter stage installed upstream for third-party compressors or contaminated / heavily corroded pipework.
2. Service life at nominal conditions 12,000 h.
3. Service life at nominal conditions 1,000 h.

* Where there are stringent requirements in relation to compressed air quality, the air receiver should always be installed in a branch line downstream from the treatment stage to prevent the entrainment of deposits.

# Compressed air station: Low and high pressure

**Illustration shows from left to right:**

(1) SIGMA AIR MANAGER 4.0 compressed air management system
(2) Rotary screw compressor
(3) Air receiver
(4) SECOTEC energy-saving refrigeration dryer
(5) KE coalescence filter with electronic ECO-DRAIN condensate drain, KA activated carbon filter
(6) DHS 4.0 air-main charging system
(7) AQUAMAT i.CF oil/water separator
(8) DN booster
(9) High-pressure air receiver
(10) THP refrigeration dryer
(11) FE-HP coalescence filter with electronic ECO-DRAIN condensate drain, FG-HP activated carbon filter
(12) AQUAMAT i.CF oil/water separator
(13) High-pressure relief chamber
(14) DHS 4.0 air-main charging system

## More compressed air for less energy

# The world is our home

As one of the world's largest manufacturers of compressors, blowers and compressed air systems, KAESER KOMPRESSOREN is represented throughout the world by a comprehensive network of wholly owned subsidiaries and authorised distribution partners in over 140 countries.

By offering innovative, efficient and reliable products and services, KAESER KOMPRESSOREN's experienced consultants and engineers work in close partnership with customers to enhance their competitive edge and to develop progressive system concepts that continuously push the boundaries of performance and technology. Moreover, decades of knowledge and expertise from this industry-leading systems provider are made available to each and every customer via the KAESER group's advanced global IT network.

These advantages, coupled with KAESER's worldwide service organisation, ensure that every product operates at the peak of its performance at all times, providing optimal efficiency and maximum availability.

**PT INDO KOMPRESIGMA**
Jl Outer Ring Road No. 65 – Kembangan Utara
Jakarta 11610 – Indonesia
Tel: 62-21-2951 8888 – Fax: 62-21-2951 0000
E-mail: info_jkt@kaeserindo.com – www.kaeser.com

P-711ID Specifications subject to change without notice. 1/26