KAESER COMPRESSORS®

# Rotary Screw Compressors

**SK Series**

With the world-renowned SIGMA PROFILE

Flow rate 0.53 to 2.70 m³/min, Pressure 5.5 to 15 bar

**www.kaeser.com**

SK series

# Efficient and reliable

Today's compressed air users expect maximum availability and efficiency, even from smaller compressors. It will therefore come as no surprise that KAESER's SK series rotary screw compressors go above and beyond meeting these key expectations. Not only do they deliver more compressed air for less energy, but they also combine ease of use and maintenance-friendliness with exceptional versatility and environmentally responsible design.

## More compressed air for less energy

The performance of SK series rotary screw compressors has been further enhanced. This has been achieved both through optimisation of the airend and minimisation of internal pressure losses.

## Energy-saving performance

The efficiency of a machine depends on the total costs incurred throughout its entire service life. With compressors, energy costs account for the lion's share of total expenditure. KAESER therefore designed its SK series models with maximum energy efficiency in mind. Refinements to the energy-saving SIGMA PROFILE rotors inside the airend and the use of Premium Efficiency IE3 motors have significantly contributed to the increased performance of these versatile compressors. The addition of the SIGMA CONTROL 2 internal controller and KAESER's unique cooling system have helped enhance efficiency even further.

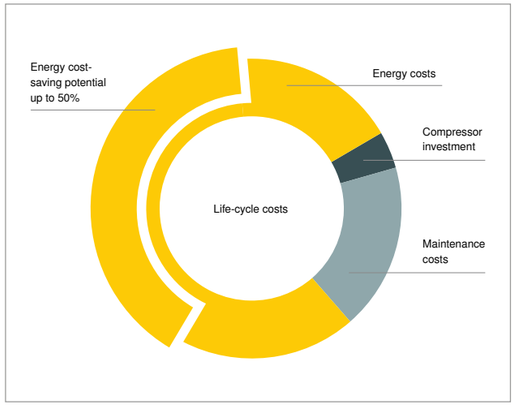


## Optimised design

All SK series models share logical and user-friendly design throughout. For example, the left-hand enclosure panel can be removed in a few simple steps to allow excellent visibility of the system's intelligently laid-out components. Needless to say, the SK series was designed to ensure best possible access to all service points. When closed, the sound-absorbing compressor housing keeps operating noise to a minimum, thereby ensuring a pleasant and quiet working environment. Moreover, with its three intake openings, the enclosure provides separate air flows for highly efficient cooling of the system, drive motor and control cabinet. Thanks to their vertical design, SK series compressors are exceptionally compact, making them the perfect choice for applications where space is at a premium.

## Modular system concept

SK series compressors are available as standard versions, as versions equipped with an integrated refrigeration dryer and as AIRCENTER versions featuring an air receiver installed beneath the compressor unit. KAESER's intelligent modular design concept therefore provides impressive flexibility. Moreover, all versions are available with an integrated frequency converter for infinitely variable speed control.

## Energy-efficiency: the essential requirement

Initial investment and servicing costs account for only a small part of a compressor's total life-cycle costs. It is energy that accounts for the lion's share of these costs.

For more than 40 years, KAESER has been committed to minimising your compressed air production energy costs. We also have the bigger picture in clear focus when it comes to servicing and maintenance costs, as well as maximum compressed air availability.



# Quiet and powerful, durable and secure.

Image: SK 25

SK series

# Design is in the details

## SIGMA PROFILE airend

At the heart of every SK system lies a premium-quality airend featuring the energy-saving SIGMA PROFILE. KAESER airends are equipped with flow-optimised rotors, which significantly contribute to the overall system's class-leading specific package input power.

## SIGMA CONTROL 2 controller

The internal SIGMA CONTROL 2 controller ensures efficient compressor control and monitoring at all times. The large display and RFID reader provide effective communication and maximum security. Multiple interfaces offer exceptional flexibility, whilst the SD card slot makes updates quick and easy.

## Maximum efficiency: IE3 motors

Needless to say, every KAESER SK series rotary screw compressor features an energy-saving, Premium Efficiency IE3 drive motor.

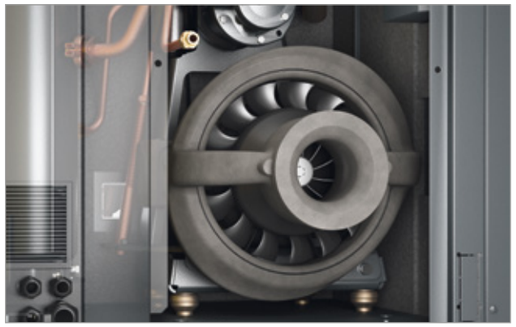

## Efficient cooling

KAESER's innovative cooling system uses a high-efficiency dual flow fan and separate airflow channels for cooling of the motor, fluid/compressed air cooler and control cabinet. This not only achieves optimum cooling performance, low compressed air discharge temperatures and minimal sound levels, but also ensures more efficient compression.

SK T (SFC) series

# Also with refrigeration dryer and variable speed control

### SK with energy-saving dryer

The compressed air refrigeration dryer is installed within a separate housing, in order to shield it from the heat emitted by the compressor and to increase operational reliability. The refrigeration dryer's automatic shutdown function further enhances energy-efficient operation.

### Also with variable speed control

Variable speed control can offer distinct advantages for particular applications, which is why this option is also available on SK series models. The frequency converter is integrated into the compressor system's control cabinet.

### Quieter than ever before

The new cooling system provides improved cooling performance with optimum soundproofing. Normal conversation can take place right beside the running compressor.

### Maintenance-friendly

All maintenance work can be easily carried out from one side. The left-hand housing cover is removable, allowing easy access to all maintenance points.

Image: SK 22 T

Image: AIRCENTER 22

AIRCENTER

# The compact and efficient compressed air station

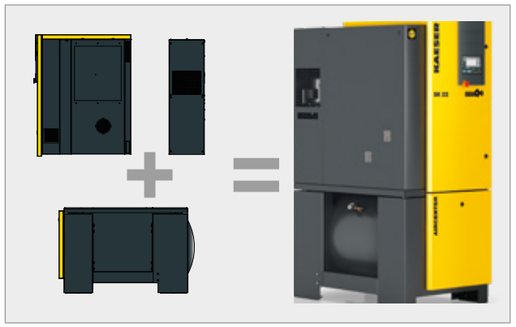

## Connect and go

All that is needed to install this compact complete compressed air station is to connect it to a power supply and the compressed air network. No further installation work is necessary.

## Durable air receiver

The 350-litre air receiver is especially designed for installation in AIRCENTER systems. All inner and outer surfaces are coated to provide excellent corrosion protection and to ensure long service life.

## Service-friendly design

The left-hand housing panel is easily removed to allow excellent accessibility to all maintenance points. Viewing windows allow convenient inspection of fluid levels and drive belt tension whilst the unit is in operation.

## Excellent component access

All maintenance and service components are easily accessible, which significantly reduces the downtime associated with service and maintenance tasks. This helps to increase compressed air availability and minimises operating costs.

INTERNATIONAL EFFICIENCY
IE3
MOTOR
KAESER
SK 25
SIGMA

# Equipment

## Complete system

Ready-to-run, fully automatic, super-silenced, vibration damped, all panels powder coated. Suitable for use in ambient temperatures up to +45 °C

## Rotary screw airend

Genuine KAESER single-stage rotary screw airend with SIGMA PROFILE rotors and cooling fluid injection for optimised cooling

## Electrical components

Ventilated IP 54 control cabinet, automatic star-delta starter, overload relay, control transformer

## Cooling fluid and air flow

“Honeycomb” structure air intake filter, pneumatic inlet and venting valves, cooling fluid separator tank with triple separation system, safety valve, minimum pressure check valve, thermostatic valve and fluid filter within the cooling fluid circuit, fluid / compressed air combination cooler

## Refrigeration dryer (with T version)

With electronically controlled condensate drain; refrigerant compressor with energy-saving, cycling shutdown feature; linked to operational status of the compressor when inactive. Alternatively, continuous operation can be selected at the user-end

## Electric motor

Premium Efficiency IE3 electric motor, quality German manufacture, IP 55 protection

## SIGMA CONTROL 2

“Traffic light” LED indicators show operating status at a glance; plain text display, 30 selectable languages, soft-touch keys with icons, fully automated monitoring and control. Selection of Dual, Quadro, Vario and Continuous control modes as standard. Standard interfaces: Ethernet for connection to the SIGMA NETWORK, Master/Slave operation or web server for KAESER Connect. SD card slot for updates and long-term storage of operating data. RFID reader.

Connection to centralised control systems available via optional communications modules for: Profibus DP-V0, Modbus RTU, DeviceNet, Modbus TCP, PROFINET IO, EtherNet/IP.

## SIGMA AIR MANAGER 4.0

The further-refined, adaptive 3-D$^{advanced}$ Control predictively calculates and compares the various operating options and selects the most efficient one to suit the specific needs of the application.

On this basis, the SIGMA AIR MANAGER 4.0 constantly adjusts flow rates and compressor energy consumption in response to current compressed air demand. This optimisation is made possible by the integrated industrial PC with multi-core processor, in combination with the adaptive 3-D$^{advanced}$ Control. Furthermore, the SIGMA NETWORK bus converter (SBC) provides a host of possibilities for enabling the system to be individually tailored to meet specific user requirements. The SBC can be equipped with digital and analogue input and output modules, as well as with SIGMA NETWORK ports, in order to enable seamless display of flow rate, pressure dew point, performance information or fault messages.

Amongst other key features, the SIGMA AIR MANAGER 4.0 provides long-term data storage capacity for reporting, controlling and audits, as well as for energy management tasks as per ISO 50001.

*(See image on right; extract from the SIGMA AIR MANAGER 4.0 brochure)*

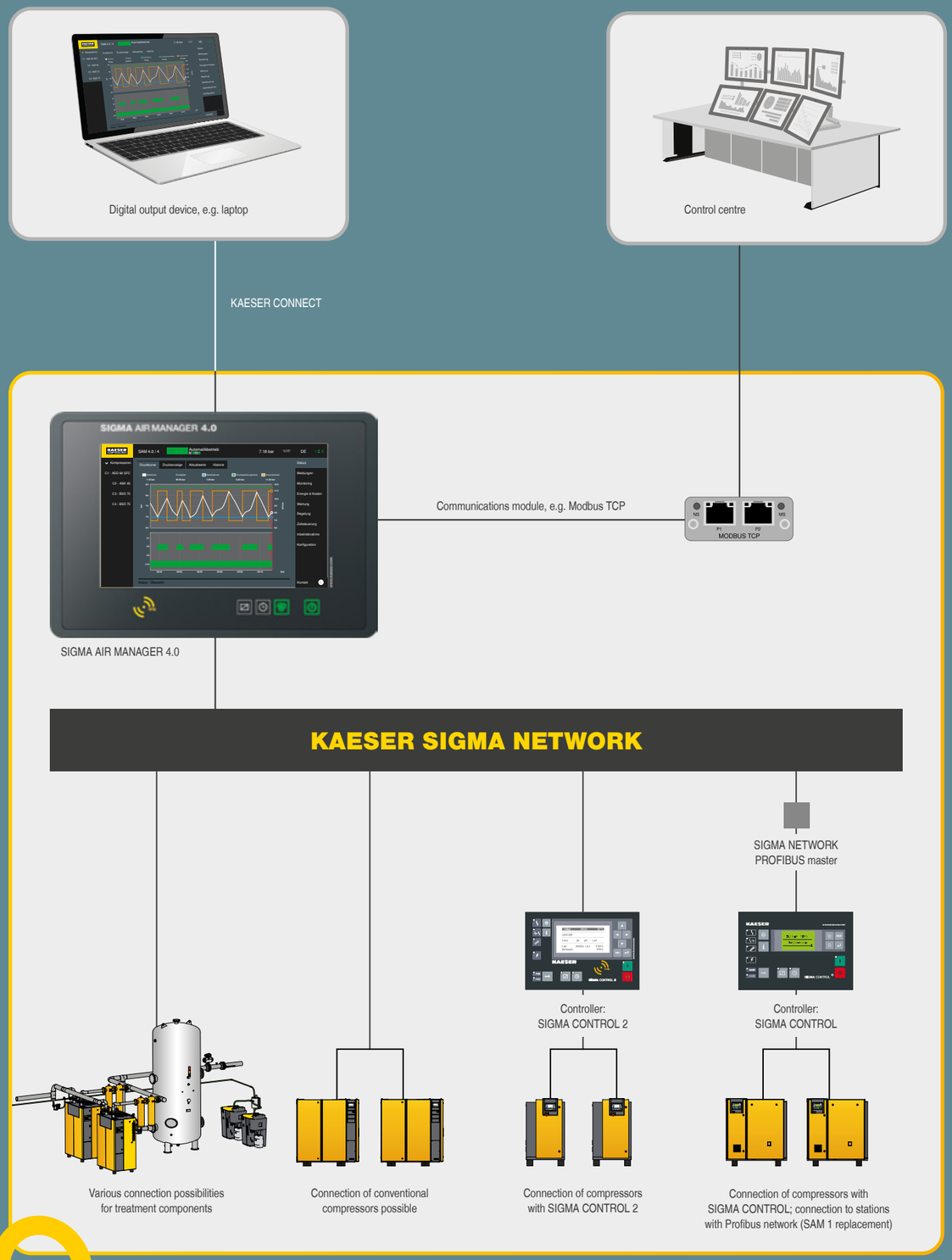


**Secure data – secure business!**

# Technical data

## Standard version / SFC – Version with frequency control

| Model | Working pressure<br>bar | Flow rate, *) complete system at working pressure<br>m³/min | Max. gauge pressure<br>bar | Drive motor rated power<br>kW | Dimensions W x D x H<br>mm | Compressed air connection | Sound pressure level **)<br>dB(A) | Weight<br>kg |
|---|---|---|---|---|---|---|---|---|
| **SK 22** | 6<br>7.5<br>10<br>13 | 2.16<br>2.02<br>1.68<br>1.31 | 6<br>8<br>11<br>15 | 11 | 750 x 895 x 1260 | G 1 | 66 | 312 |
| **SK 25** | 6<br>7.5<br>10<br>13 | 2.69<br>2.52<br>2.12<br>1.71 | 6<br>8<br>11<br>15 | 15 | 750 x 895 x 1260 | | 67 | 320 |
| **SK 22 SFC** | 7.5<br>10<br>13 | 0.63 - 1.99<br>0.64 - 1.68<br>0.58 - 1.38 | 8<br>11<br>15 | 11 | 750 x 895 x 1260 | G 1 | 67 | 329 |
| **SK 25 SFC** | 7.5<br>10<br>13 | 0.82 - 2.57<br>0.85 - 2.27<br>0.84 - 1.91 | 8<br>11<br>15 | 15 | 750 x 895 x 1260 | | 68 | 337 |

## T – Version with refrigeration dryer / T SFC – Version with refrigeration dryer and frequency control

| Model | Working pressure<br>bar | Flow rate, *) complete system at working pressure<br>m³/min | Max. gauge pressure<br>bar | Drive motor rated power<br>kW | Refrigeration dryer model | Dimensions W x D x H<br>mm | Compressed air connection | Sound pressure level **)<br>dB(A) | Weight<br>kg |
|---|---|---|---|---|---|---|---|---|---|
| **SK 22 T** | 6<br>7.5<br>10<br>13 | 2.16<br>2.02<br>1.68<br>1.31 | 6<br>8<br>11<br>15 | 11 | ABT 25 | 750 x 1240 x 1260 | G 1 | 66 | 387 |
| **SK 25 T** | 6<br>7.5<br>10<br>13 | 2.69<br>2.52<br>2.12<br>1.71 | 6<br>8<br>11<br>15 | 15 | ABT 25 | 750 x 1240 x 1260 | | 67 | 395 |
| **SK 22 T SFC** | 7.5<br>10<br>13 | 0.63 - 1.99<br>0.64 - 1.68<br>0.58 - 1.38 | 8<br>11<br>15 | 11 | ABT 25 | 750 x 1240 x 1260 | G 1 | 67 | 404 |
| **SK 25 T SFC** | 7.5<br>10<br>13 | 0.82 - 2.57<br>0.85 - 2.27<br>0.84 - 1.91 | 8<br>11<br>15 | 15 | ABT 25 | 750 x 1240 x 1260 | | 68 | 412 |

## Technical data for add-on refrigeration dryer

| Model | Refrigeration dryer power consumption<br>kW | Pressure dew point<br>°C | Refrigerant | Refrigerant charge<br>kg | Global warming potential<br>GWP | $CO_2$ equivalent<br>t | Hermetic refrigeration circuit |
|---|---|---|---|---|---|---|---|
| **ABT 25** | 0.49 | +3 | R-513A | 0.52 | 629 | 0.33 | Yes |

*) Flow rate, complete system as per ISO 1217: 2009 Annexe C/E: absolute inlet pressure 1 bar (a), cooling and air inlet temperature +20 °C
**) Sound pressure level as per ISO 2151 and basic standard ISO 9614-2, tolerance: ± 3 dB (A)



## AIRCENTER – Standard version / AIRCENTER – SFC version

| Model | Working pressure<br>bar | Flow rate, *) complete system at working pressure<br>m³/min | Max. gauge pressure<br>bar | Drive motor rated power<br>kW | Refrigeration dryer model | Air receiver capacity<br>l | Dimensions W x D x H<br>mm | Compressed air connection | Sound pressure level **)<br>dB(A) | Weight<br>kg |
|---|---|---|---|---|---|---|---|---|---|---|
| **AIRCENTER 22** | 6<br>7.5<br>10<br>13 | 2.16<br>2.02<br>1.68<br>1.31 | 6<br>8<br>11<br>15 | 11 | ABT 25 | 350 | 750 x 1335 x 1880 | G 1 | 66 | 579 |
| **AIRCENTER 25** | 6<br>7.5<br>10<br>13 | 2.69<br>2.52<br>2.12<br>1.71 | 6<br>8<br>11<br>15 | 15 | ABT 25 | 350 | 750 x 1335 x 1880 | | 67 | 587 |
| **AIRCENTER 22 SFC** | 7.5<br>10<br>13 | 0.63 - 1.99<br>0.64 - 1.68<br>0.58 - 1.38 | 8<br>11<br>15 | 11 | ABT 25 | 350 | 750 x 1335 x 1880 | G 1 | 67 | 596 |
| **AIRCENTER 25 SFC** | 7.5<br>10<br>13 | 0.82 - 2.57<br>0.85 - 2.27<br>0.84 - 1.91 | 8<br>11<br>15 | 15 | ABT 25 | 350 | 750 x 1335 x 1880 | | 68 | 604 |

# How it works

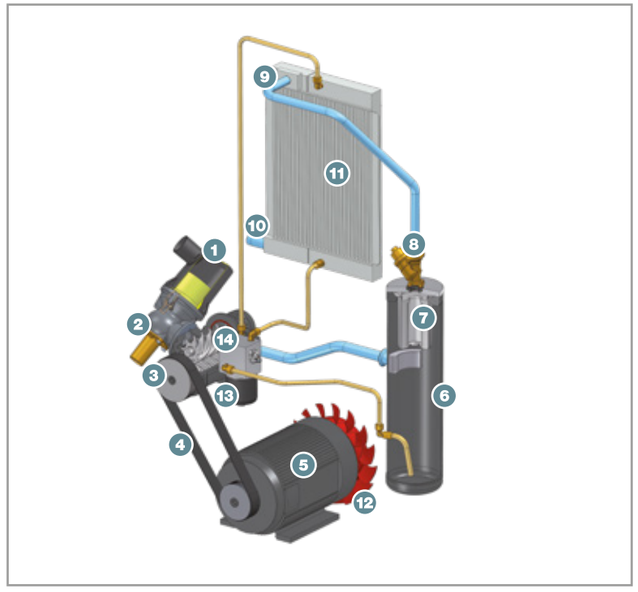


(1) Intake air filter
(2) Inlet valve
(3) Airend
(4) Belt drive
(5) IE3 drive motor
(6) Fluid separator tank
(7) Fluid separator cartridge
(8) Minimum pressure check valve
(9) Compressed air aftercooler
(10) Compressed air connection
(11) Fluid cooler
(12) Fan
(13) Fluid filter
(14) Thermostatic valve

**More compressed air for less energy**

# The world is our home

As one of the world's largest manufacturers of compressors, blowers and compressed air systems, KAESER KOMPRESSOREN is represented throughout the world by a comprehensive network of wholly owned subsidiaries and authorised distribution partners in over 140 countries.

By offering innovative, efficient and reliable products and services, KAESER KOMPRESSOREN's experienced consultants and engineers work in close partnership with customers to enhance their competitive edge and to develop progressive system concepts that continuously push the boundaries of performance and technology. Moreover, decades of knowledge and expertise from this industry-leading systems provider are made available to each and every customer via the KAESER group's advanced global IT network.

These advantages, coupled with KAESER's worldwide service organisation, ensure that every product operates at the peak of its performance at all times, providing optimal efficiency and maximum availability.

**PT INDO KOMPRESIGMA**
Jl Outer Ring Road No. 65 – Kembangan Utara
Jakarta 11610 – Indonesia
Tel: 62-21-2951 8888 – Fax: 62-21-2951 0000
E-mail: info_jkt@kaeserindo.com – www.kaeser.com

P-651/10ID Specifications subject to change without notice 1/25