KAESER COMPRESSORS®

Rotary Screw Compressors

FSD Series

With the world-renowned SIGMA PROFILE

Flow rate up to 61.4 m³/min, Pressure up to 15 bar

www.kaeser.com

FSD series

Setting the standard

KAESER KOMPRESSOREN pushes the boundaries of compressed air availability and efficiency once again with its latest generation of **FSD** series rotary screw compressors. The intelligent fusion of established basics and innovative detailed solutions in system design not only enhances ease of operation and maintenance, but also give these rotary screw compressors their distinctive modern appearance.

FSD – The multi-saver

Delivering improved specific package input power, the flow-optimised and further-refined SIGMA PROFILE rotors provide the basis for the compressor's world-renowned energy efficiency. Power consumption is reduced still further through the use of high-efficiency IE4 motors and loss-free 1:1 direct transmission of motor power to the airend. Moreover, the radial fan meets the efficiency requirements for fans in accordance with Directive (EU) 327/2011. Last but not least, the advanced SIGMA CONTROL compressor controller achieves additional energy savings by minimising cost-intensive idle times through a variety of selectable control mode options, e.g. Dynamic control.

Service-friendly = Economical

The distinctive, eye-catching exterior system design is complemented by intelligent internal component layout for even greater cost efficiency. For example, all service and maintenance parts are directly accessible from the front of the machine, which not only saves time (and therefore money) when performing service work, but also increases compressed air system availability.

Up to
96 %
usable for heating

Perfect partners

FSD series rotary screw compressors are the perfect partners for high-efficiency industrial compressed air stations. The internal SIGMA CONTROL compressor controller offers numerous communications interfaces (e.g. Ethernet), which, when connected within the KAESER SIGMA NETWORK, make seamless communication with the SIGMA AIR MANAGER 4.0 compressed air management system or in-house centralised control technology easier, safer and more efficient than ever before.

Electronic Thermal Management

Powered by an electric motor, the sensor-controlled temperature regulating valve integrated into the cooling circuit is the heart of the innovative Electronic Thermal Management (ETM) system. The SIGMA CONTROL compressor controller monitors the intake and compressor temperature to ensure that condensate formation is reliably prevented, even at high humidity levels. ETM dynamically regulates the fluid temperature, which increases energy efficiency when fluid temperatures are low. When an FSD machine is equipped with heat recovery, further ETM systems are fitted. This enables the heat recovery function to be better adapted to the customer's exact requirements.

Why choose heat recovery?

In fact, the question should be: Why not? Ultimately, up to 100% of the (electrical) drive energy supplied to any rotary screw compressor is converted into heat. Up to 96% of this energy can be recovered and reused for heating purposes. This not only reduces primary energy consumption, but also significantly improves the company's overall energy balance.

Service-friendly

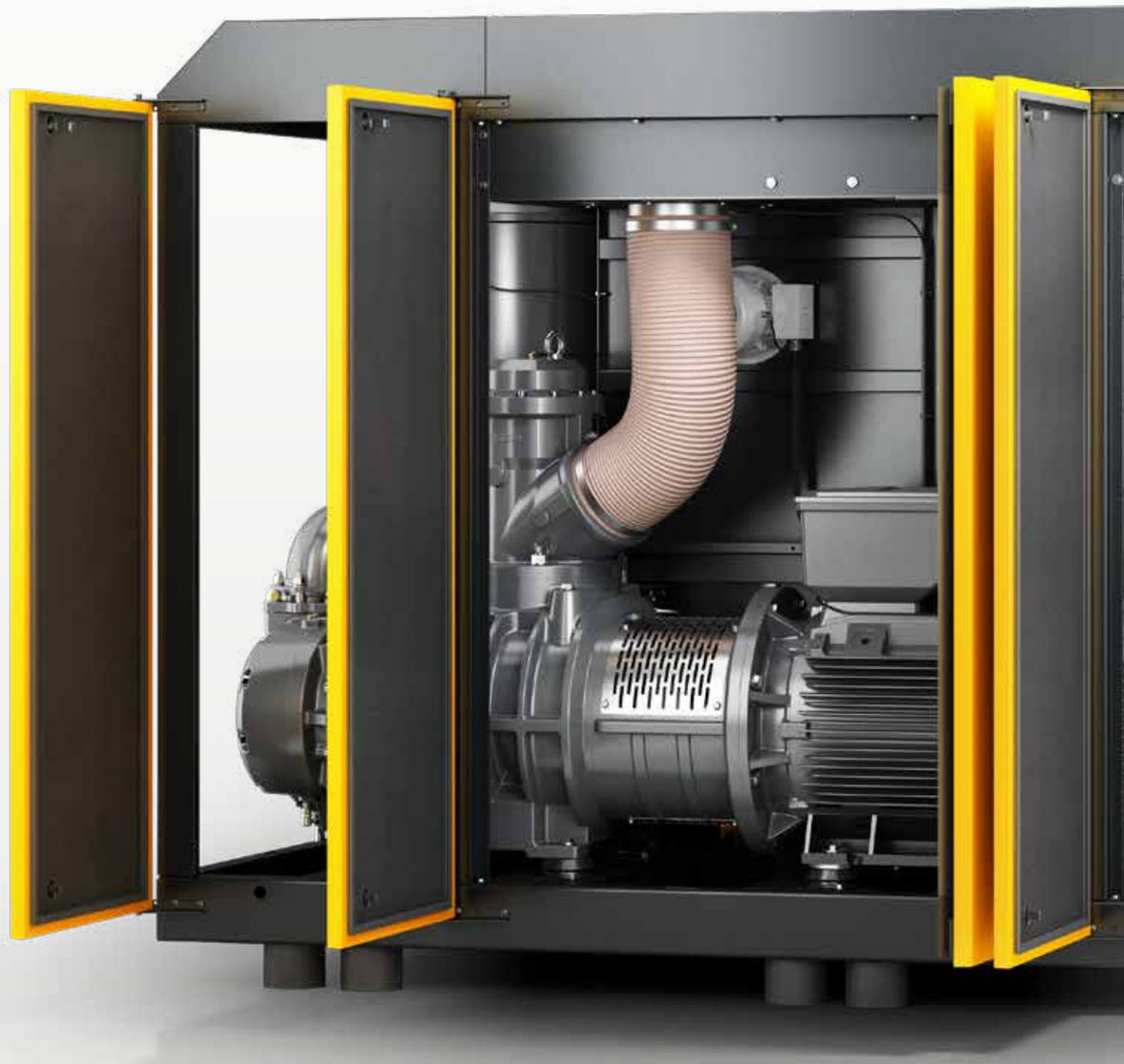

Made in Germany

Image: FSD 445, air-cooled

FSD series

Energy savings in every detail

Save energy with the SIGMA PROFILE

At the heart of every FSD system lies a premium-quality airend featuring the energy-saving SIGMA PROFILE. KAESER airends are equipped with flow-optimised rotors, which contribute significantly to the complete system's class-leading specific package input power.

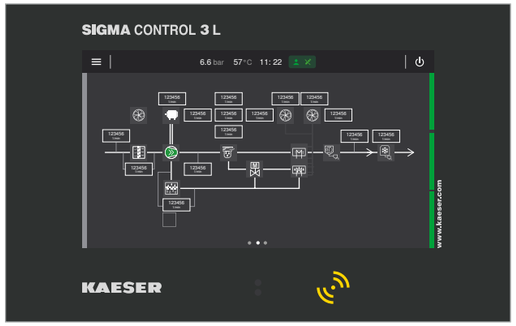

SIGMA CONTROL controller

Comprehensive overview of components and assemblies – including live values in real time. Intuitive icons show current system health status. Detailed views and settings options open at the click of a button. Clear visibility of the air, oil, cooling water and heat recovery circuits guarantees a pinpoint overview and optimal control.

IE4 – Energy-saving motors

It goes without saying that all KAESER FSD series rotary screw compressors are equipped with highly efficient, energy-saving IE4 motors.

Correct temperature assured

The innovative Electronic Thermal Management (ETM) dynamically controls fluid temperature for reliable prevention of condensate formation and enhanced energy efficiency.

FSD series

Efficient in every way

Dependable condensate pre-separation

Integrated as standard, the KAESER centrifugal separator with ECO-DRAIN electronic condensate drain provides an exceptionally high degree of separation (> 99%) with minimal pressure loss. Dependable and energy-efficient condensate separation is therefore assured, even at high ambient temperatures and humidity.

Eco-friendly fluid filters

The ECO-filter elements in the aluminium fluid filter housing are “metal-free”. They can therefore simply be disposed of thermally at the end of their service life.

Optimised inlet valve

The new, flow-optimised design of the inlet valve minimises intake pressure losses and simplifies servicing.

Energy-saving 1:1 direct drive

With 1:1 direct drive, the drive motor and airend – together with the coupling and coupling flange – form a compact, durable unit that operates with zero drive losses.

FSD series

Clever cooling for significant savings

Low operating temperature

Fans with variable-speed motors are thermostat-controlled to generate only the exact amount of cooling air required for low operating temperatures. This significantly reduces the overall energy demand of FSD rotary screw compressor systems.

Low compressed air temperature

Effective aftercooling helps to maintain a low compressed air discharge temperature. In combination with the centrifugal separator, this ensures the removal of large amounts of condensate, which is then drained off without energy loss via the electronically controlled ECO-DRAIN. This in turn reduces the burden on downstream treatment components.

Coolers cleaned from the outside

Unlike internal radiators, the externally mounted coolers on all FSD systems are easy to access and simple to clean. Operational reliability and availability are therefore enhanced, as contaminant build-up is easily spotted.

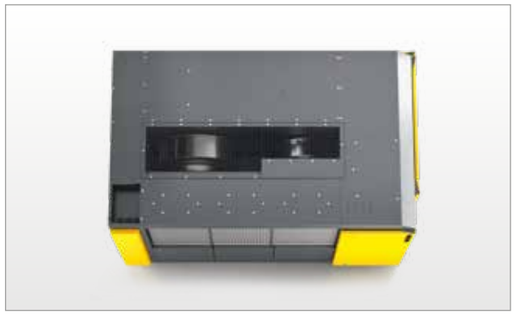

High residual exhaust air thrust

The integrated radial fans are significantly more efficient than axial fans and provide high residual thrust. This generally enables hot exhaust air to be directly ducted away without need of an auxiliary fan.

Service-friendly

Excellent accessibility

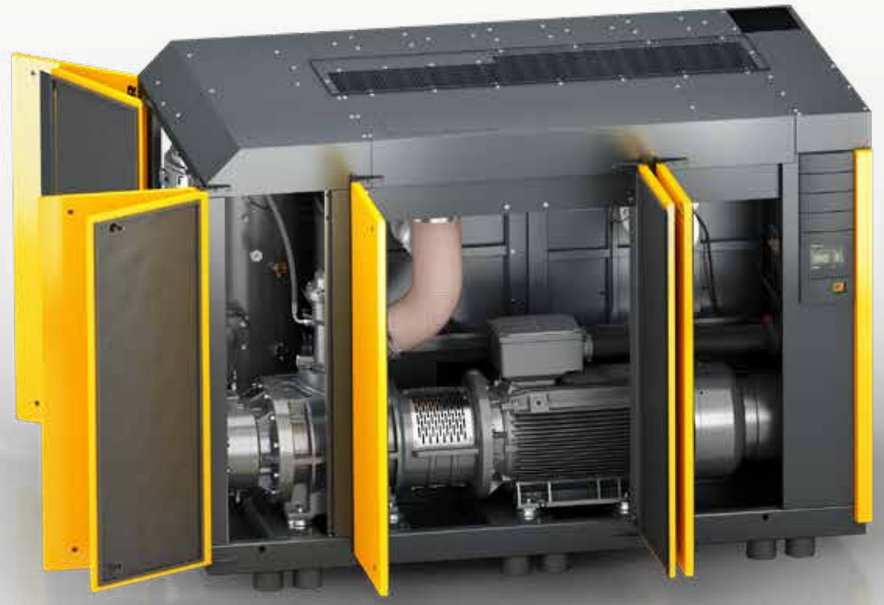

Image: FSD 375, air-cooled

Oil separator cartridge changes

The cartridge can be easily changed from above, with only one roof panel needing removal. The oil separator tank cover can be pivoted aside inside the machine.

External lubrication

Electric motors must be lubricated while running. On FSD systems, service personnel can easily perform this task for the drive and fan motors from outside the machine, thereby ensuring maximum safety.

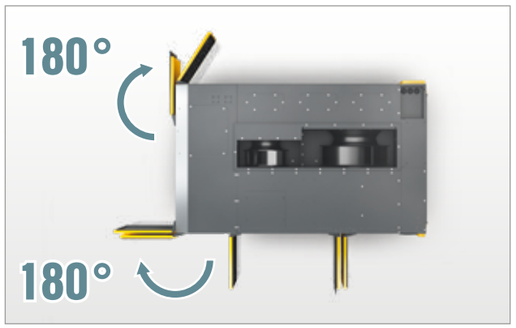

Service doors swing open 180°

The wide-opening service doors allow excellent accessibility to all components for maximum ease of service. This speeds up maintenance tasks, reduces operating costs, and increases availability.

Easy replacement of maintenance parts

Just like the air filter, which is easily changed from the front of the machine, all other maintenance parts are conveniently accessible. Thanks to the additional pre-separation fleece on the intake air filter, coarse contaminants are captured and the service life of the filter element is significantly extended.

FSD SFC series

Compressor with variable-speed drive

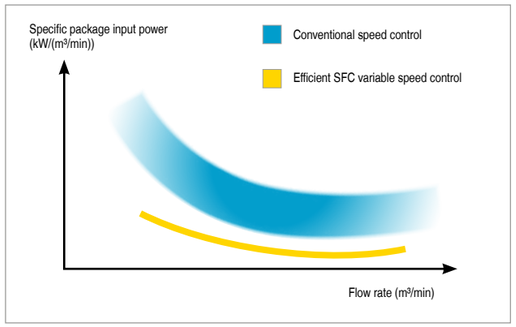

Optimised specific package input power

In every compressed air station, the variable-speed rotary screw compressor is the system with the highest load. FSD SFC models are therefore designed to provide maximum efficiency without running at extreme speeds. This saves energy, maximises service life, and enhances reliability.

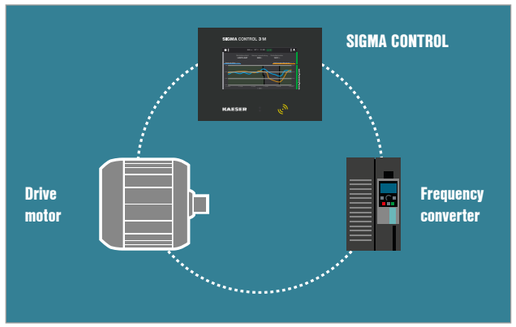

SIGMA CONTROL: Optimum efficiency

Perfect matching of the frequency converter, drive motor, and controller ensures exceptional efficiency across the machine's wide operating range and minimises machine vibration. Moreover, thanks to the thermally optimised control cabinet, ambient temperatures of up to +45 °C pose no problem.

Separate SFC control cabinet

A separate control cabinet protects the SFC frequency converter from compressor exhaust heat. A dedicated fan keeps operating temperatures in the optimum range to ensure maximum performance and service life for the SIGMA FREQUENCY CONTROL.

EMC-certified complete system

It goes without saying that the SFC control cabinet and SIGMA CONTROL controller are tested and certified to EMC Directive EN 55011 for Class A1 industrial power supplies, both as individual components and as a complete system.

FSD SFC model shown

...with plate-type heat exchanger

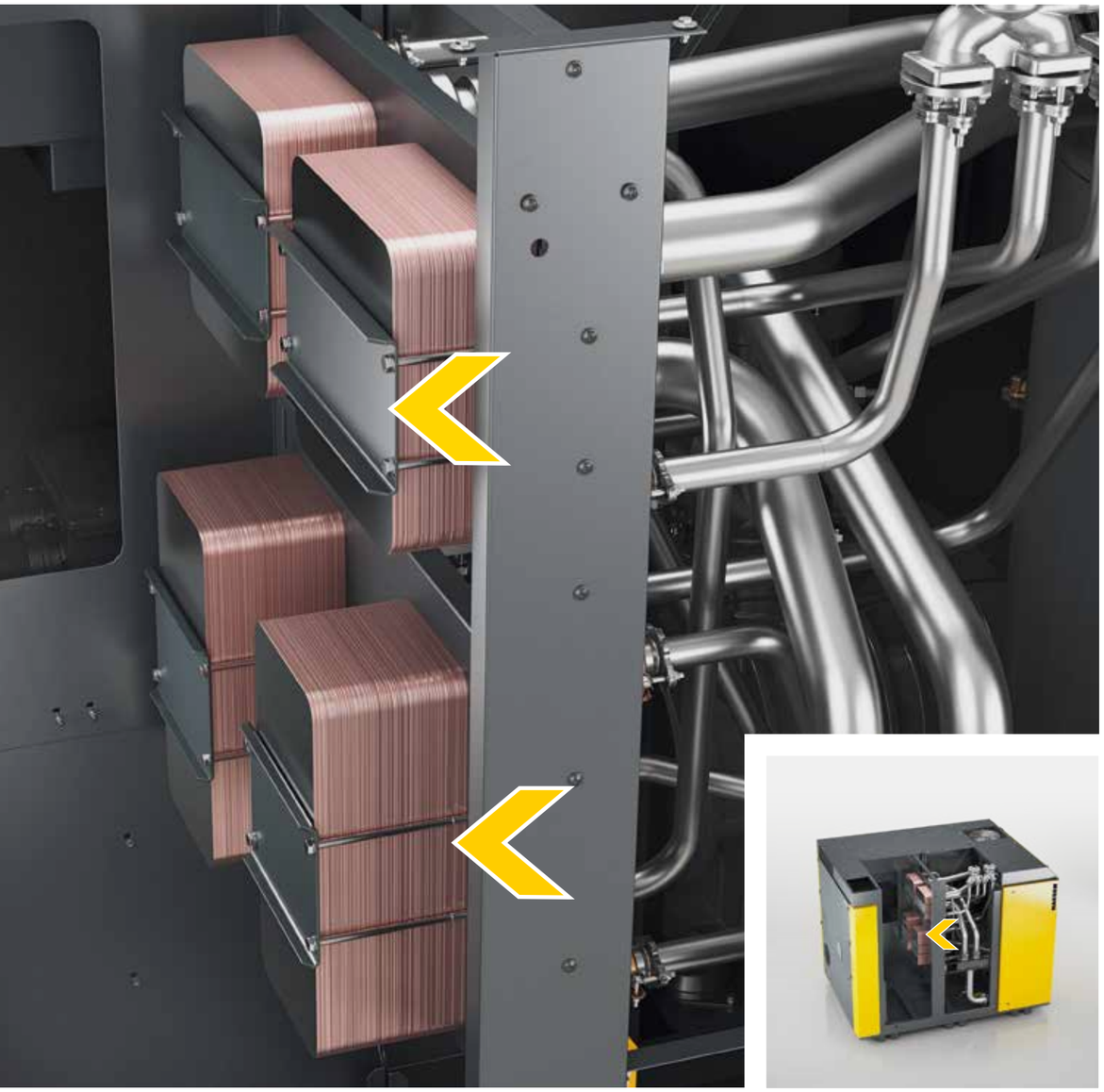

Two copper plate-soldered, stainless steel plate-type heat exchangers provide excellent heat transfer thanks to their corrugated plate design with high cooling capacity – the perfect choice for applications using clean compressor cooling water.

...with shell-and-tube heat exchanger

Shell-and-tube heat exchangers made from copper-nickel alloy (CuNi10Fe) are less prone to contamination than plate-type heat exchangers of comparable cooling capacity, whilst being significantly more durable and mechanically cleanable. Moreover, the cooler inserts are simple to change. They are also seawater-resistant and therefore suitable for compressors in marine operations, whilst pressure losses are exceptionally low.

Heat recovery – Energy from compression

CO_2 savings with heat recovery

Up to 96% of a compressor's electrical power consumption can be recovered as heat energy. Make use of this potential and obtain your compressed air and heat from a single source: the CO_2 savings potential in comparison with oil or gas heating is considerable.

Space heating with hot exhaust air

Even an air-cooled FSD without special equipment can supply an impressive amount of heat: thanks to the radial fan with high residual thrust, hot exhaust air can often be easily ducted away to spaces that require heating without need of an auxiliary fan.

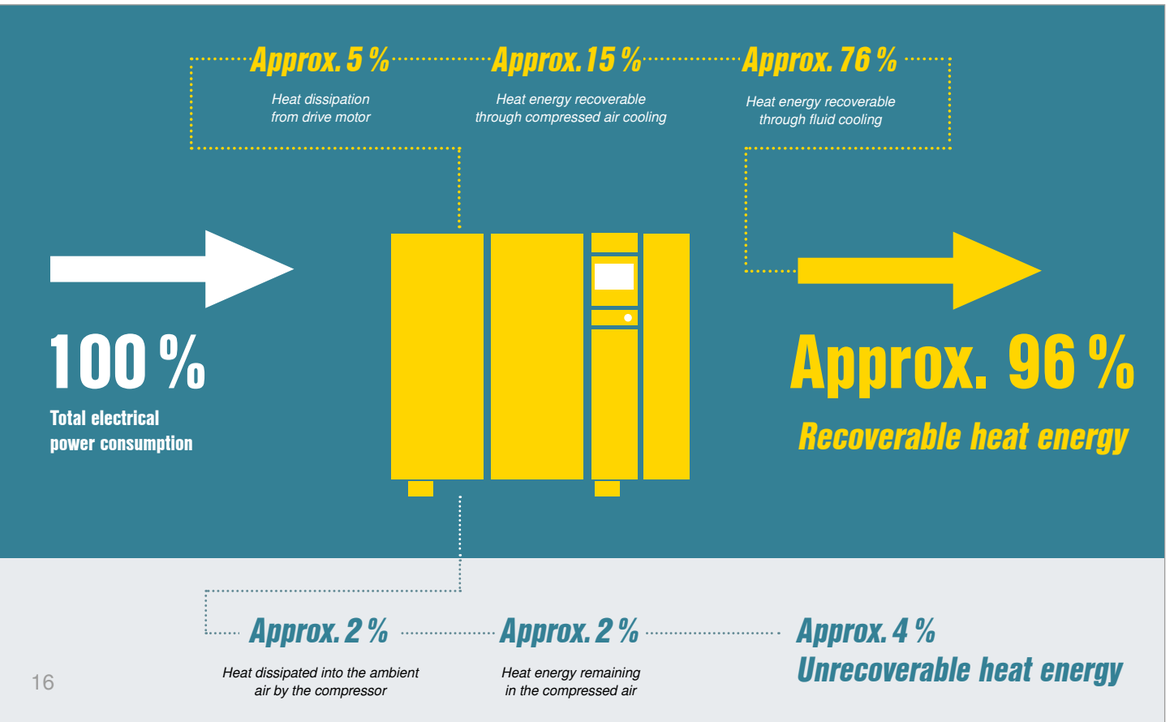

Optional hot water generation

With the optional integrated heat recovery system, an additional plate-type heat exchanger and a second ETM valve are installed. This allows an FSD compressor to provide hot water up to 70 °C!

Flexible in every respect - thanks to SIGMA CONTROL and ETM

The SIGMA CONTROL controller enables precise setting of the airend discharge temperature required for the compressed air in order to achieve the desired water discharge temperature from the heat recovery system. When heat recovery is not required, this feature can be deactivated via the SIGMA CONTROL. In this case, the airend discharge temperature is flexibly adjusted in order to save energy and prevent condensate formation.

Maximum energy savings

The more heat dissipated via the hot water, the slower the variable-speed fan operates, thereby saving more energy.

Feed heat into your heating systems

Up to 76% of the energy originally supplied to the compressor can be recovered and reused in hot-water heating systems and service water installations, which significantly reduces primary energy consumption for heating.

Clean hot water

When no other water circuit is connected, special fail-safe heat exchangers meet the highest demands for water purity, such as those required for cleaning water in the food industry.

FSD series

Drive systems

Fixed speed, fixed flow rate

Base load FSD

KAESER compressors are optimally designed for a specific operating speed. They deliver a constant air volume at a fixed motor speed – achieving maximum efficiency. This makes them ideal for applications with constant or slightly fluctuating compressed air demand.

Your goals, our commitment:

FSD base load compressors stand out for their functional, durable drive technology and supreme levels of efficiency.

Variable speed, variable flow rate

Peak load FSD

Maximum flexibility and sustainability: thanks to their variable-speed drive motors, FSD peak load compressors from KAESER always deliver the precise volume of compressed air that is actually required. This makes them particularly efficient in applications with variable compressed air demand.

Your goals, our commitment:

FSD peak load compressors stand out with their exceptional flexibility when it comes to delivery volumes, while maintaining impressive efficiency across the entire delivery range.

SUPER PREMIUM EFFICIENCY IE4

When it comes to base load compressors, Super Premium Efficiency IE4 asynchronous motors guarantee best possible efficiency thanks to their well-proven, durable technology and renowned service-friendliness.

Perfect teamwork

IE4 motors guarantee energy-efficient operation whilst at the same time fulfilling European efficiency requirements. When combined with SFC technology, speed is precisely adjusted according to compressed air requirement, thereby reducing idle times and energy costs.

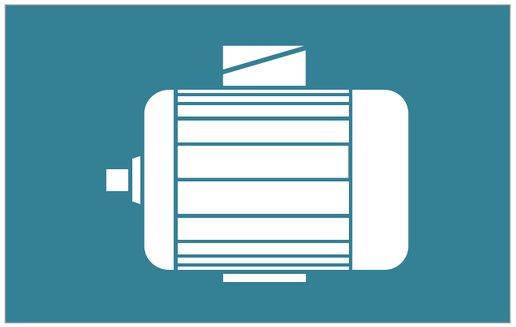

Sustainable and service-friendly

The IE4 asynchronous motors fitted by KAESER are designed to conserve resources. High-quality electrical steel and optimised windings reduce material use and enhance efficiency. This makes the drive not only highly durable, but also service-friendly.

Efficient and economical

Super Premium Efficiency motors deliver high efficiency levels throughout their entire speed range. This helps to save energy and therefore costs, even during partial load operation.

SIGMA CONTROL internal compressor controller

SIGMA CONTROL

Intelligent, future-oriented, and efficient – the integrated SIGMA CONTROL compressor controller represents the future of cutting-edge compressed air systems. With its innovative platform concept for hardware and software, KAESER has set new standards in control of stationary compressors. The SIGMA CONTROL not only increases energy efficiency, but also enhances reliability and simplifies operation, whilst the touch display places intuitive control right at your fingertips. Clear visualisations provide an optimal overview of machine status, operating data, and maintenance information at all times. Fast navigation takes you directly to the key functions – no lengthy scrolling or searching required.

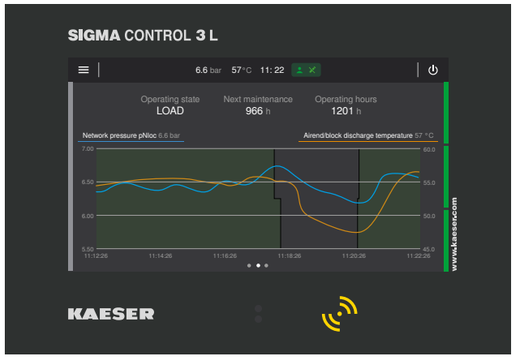

Maximum control with KAESER Connect

With our KAESER Connect app, you always have an eye on your compressor. All values are displayed in real time, allowing you to remain continuously informed about the current status of your compressed air system. Push notifications keep you up to speed with developments: important updates, KPIs, maintenance counter information, and machine states are delivered directly to your mobile device. The machine report provides even more transparency and can be sent quickly and easily to your smartphone or E-mail. This allows you to manage your compressed air system efficiently and comfortably, with maximum security – wherever you are.

Future-proof

Modular system architecture with universal, configurable IoT interfaces enables flexible adaptation to new requirements and technologies.

Greater efficiency

Intelligent control significantly reduces the energy consumption of your compressed air system.

Maximum dependability

Smart maintenance planning, early detection of deviations during operation, and detailed status messaging ensure reliable and interruption-free function.

Comprehensive compatibility

Compatible with all KAESER compressors, whether current or previous models.

SIGMA AIR MANAGER 4.0 compressed air management system

SIGMA AIR MANAGER 4.0

Adaptive, efficient and networked: demand-oriented compressed air management takes on a whole new meaning with the SIGMA AIR MANAGER 4.0. This advanced master controller coordinates operation of multiple compressors, as well as dryers or filters, with exceptional efficiency. A patented, simulation-based optimisation process determines future demand based on past compressed air consumption profiles. Thanks to networking of all components in the compressed air station via this intelligent master controller and the secure KAESER SIGMA NETWORK, comprehensive monitoring, energy management and predictive maintenance are all possible.

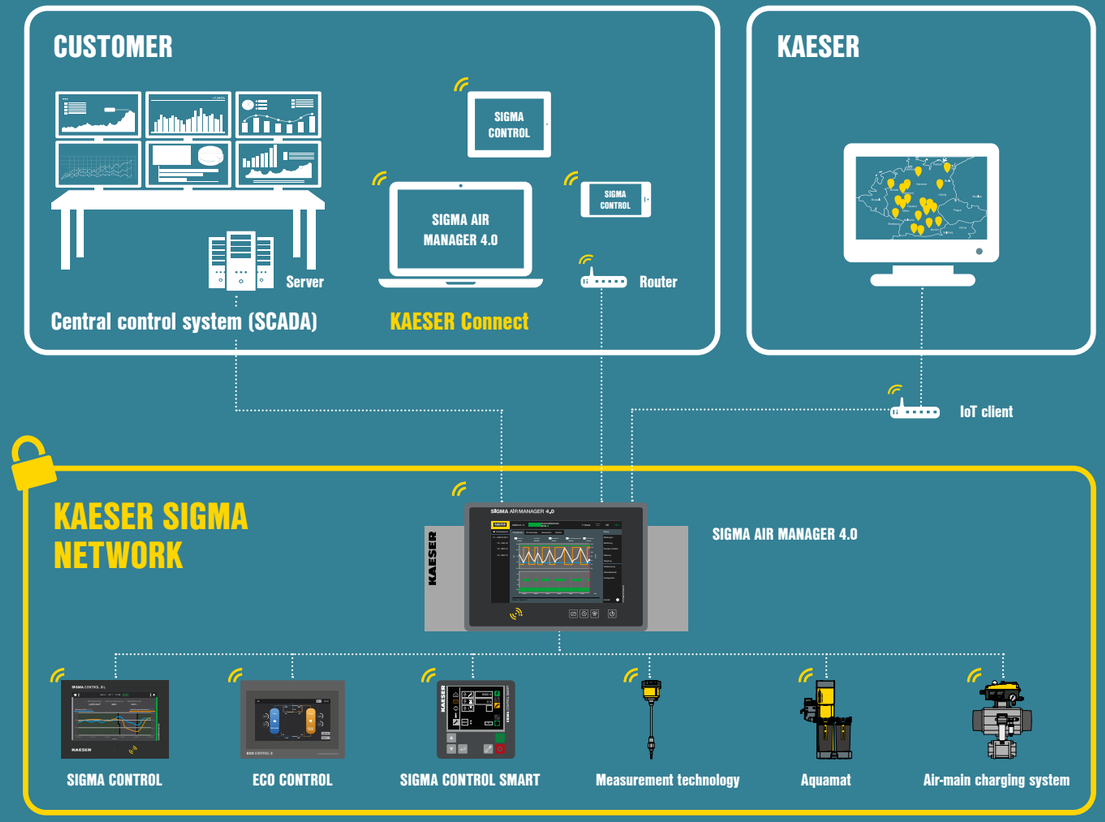

Equipment

Complete system

Ready for operation, fully automatic, silenced, vibration damped, all panels powder coated; can be used in ambient temperatures up to +45 °C; service-friendly design: bearings for drive and fan motors can be re-lubricated externally.

Airend

Genuine KAESER single-stage rotary screw airend with energy-saving SIGMA PROFILE rotors and cooling-fluid injection for optimised rotor cooling; 1:1 direct drive.

Cooling fluid / air circuit

Dry air filter with pre-separation, intake silencer, pneumatic inlet and venting valve, cooling fluid separator tank with triple separation system; safety valve, minimum pressure check valve, Electronic Thermal Management (ETM) and Eco fluid filter in cooling fluid circuit, fluid and compressed air aftercoolers (air-cooled as standard); two fan motors (one with variable speed control); KAESER centrifugal separator with electronically controlled, energy-saving ECO-DRAIN condensate drain featuring zero pressure loss; stainless steel pipework and centrifugal separator.

Water-cooled version

Fluid and compressed air aftercooler designed as water-cooled plate-type or optionally as shell-and-tube heat exchanger (seawater-resistant version also optionally available); water circuit made from stainless steel pipework 1.4301.

Optimised separation system

The combination of flow-optimised pre-separation and special separator cartridges results in a minimal residual fluid content of < 2 mg/m³ for the compressed air. This separation system requires less maintenance.

Internal heat recovery (optional)

Optionally equipped with integrated fluid-water plate-type heat exchangers and additional fluid thermostatic valves; external connections.

Electrical components

Super Premium Efficiency IE4 drive motor with three Pt100 winding temperature sensors for motor monitoring, IP 54 control cabinet, control cabinet ventilation, automatic star-delta protection combination, overload relay, control transformer; frequency converter for drive motor on SFC version.

SIGMA CONTROL

Modular system with control unit and integrated inputs/outputs, designed for use with KAESER rotary screw compressors, traffic-light operating state display, fully automatic monitoring and control; Dual, Quadro, Dynamic, and Vario control modes, timer for compressor functions (On, Off) or external outputs, base load sequencing function for operation of two compressors, high-performance processor hardware; all components designed for industrial conditions, capacitive touchscreen with optical bonding, Time-of-Flight and other internal sensors, SD card slot for updates, USS bus communications module adapter for frequency converter, RFID reader, Ethernet interface for connection to KAESER SIGMA NETWORK.

Connection to centralised control systems available via optional communications modules for: Profibus DP, Modbus TCP, Profinet, and DeviceNet.

Efficient Dynamic control

The Dynamic control uses the motor winding temperature to calculate run-on times. This reduces idle times and cuts energy consumption. SIGMA CONTROL offers additional control modes if required.

Technical data

Standard versions

Model	Working pressure bar	Flow rate, *) complete system at working pressure m³/min	Max. gauge pressure bar	Drive motor nominal power kW	Dimensions W x D x H mm	Compressed air connection	Sound pressure level **) dB(A)	Weight kg
FSD 475	7.5	48.20	8.5	250	3495 x 2145 x 2360	DN 150	79	6580
	10	37.63	12					
	13	29.52	15					
FSD 575	7.5	58.40	8.5	315	3495 x 2145 x 2360	DN 150	79	6750
	10	47.57	12					
	13	37.00	15					

SFC versions with variable-speed drive

Model	Working pressure bar	Flow rate, *) complete system at working pressure m³/min	Max. gauge pressure bar	Drive motor nominal power kW	Dimensions W x D x H mm	Compressed air connection	Sound pressure level **) dB(A)	Weight kg
FSD 475 SFC	7.5	10.6 - 49.87	8.5	250	3740 x 2145 x 2360	DN 150	79	6930
	10	9.93 - 44.08	12					
FSD 575 SFC	7.5	13.33 - 59.83	8.5	315	3740 x 2145 x 2360	DN 150	80	7300
	10	12.90 - 50.85	12					
	13	11.55 - 45.00	15					

*) Flow rate, complete system as per ISO 1217: 2009, Annexe C/E: Absolute inlet pressure 1 bar(a), cooling and air inlet temperature +20 °C
**) Sound pressure level as per ISO 2151 and basic standard ISO 9614-2, tolerance: ± 3 dB (A)

Note for water-cooled version: The technical data for “Dimensions”, “Sound pressure level”, and “Weight” differ from the air-cooled version.

More compressed air for less energy

The world is our home

As one of the world's largest manufacturers of compressors, blowers and compressed air systems, KAESER KOMPRESSOREN is represented throughout the world by a comprehensive network of wholly owned subsidiaries and authorised distribution partners in over 140 countries.

By offering innovative, efficient and reliable products and services, KAESER KOMPRESSOREN's experienced consultants and engineers work in close partnership with customers to enhance their competitive edge and to develop progressive system concepts that continuously push the boundaries of performance and technology. Moreover, decades of knowledge and expertise from this industry-leading systems provider are made available to each and every customer via the KAESER group's advanced global IT network.

These advantages, coupled with KAESER's worldwide service organisation, ensure that every product operates at the peak of its performance at all times, providing optimal efficiency and maximum availability.

KAESER COMPRESSORS NZ LIMITED
18B Tarndale Grove, Albany 0632 - New Zealand
Tel.: 0064 21 345 242 - E-Mail: info.newzealandkaeser.com - nz.kaeser.com

P-651/30NZ Specifications subject to change without notice. /26